SITE

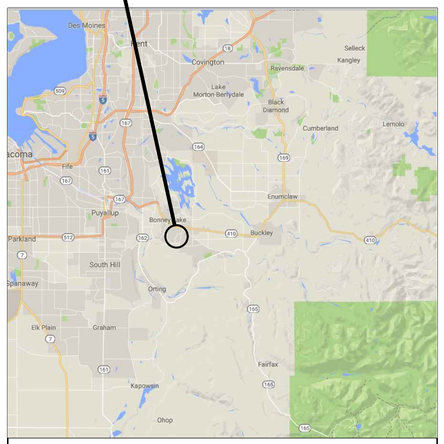

LOCATION MAP NO SCALE

BUILDING

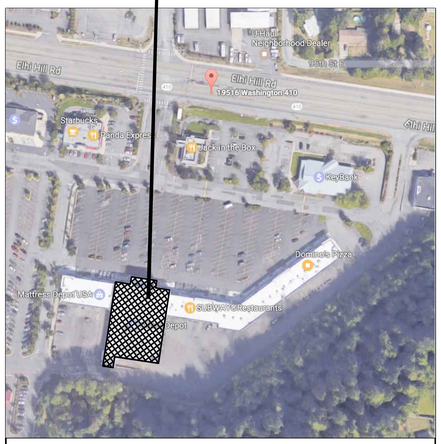

SITE AERIAL IMAGE NO SCALE

2015 INTERNATIONAL BUILDING CODE WITH APPENDIXES & AMENDMENTS
ICC/ANSI A117.1–2012, ACCESSIBLE AND USABLE BUILDINGS AND FACILITIES, WITH STATEWIDE AMENDMENTS
2015 INTERNATIONAL MECHANICAL CODE WITH APPENDIXES & AMENDMENTS
2015 INTERNATIONAL FUEL GAS CODE
2015 INTERNATIONAL FIRE CODE WITH AMENDMENTS
2015 UNIFORM PLUMBING CODE WITH AMENDMENTS & APPENDIXES
2012 INTERNATIONAL ENERGY CONSERVATION CODE/WASHINGTION STATE ENERGY CODE
2014 NATIONAL ELECTRICAL CODE

TENANT IMPROVEMENT RENOVATION

AREA:	±22,116 S.F. – EXISTING BUILDING & SCOPE OF WORK AREA
USE:	A–3 ASSEMBLY – GYMNASIUM
CONSTRUCTION TYPE:	3B NONCOMBUSTIBLE / COMBUSTIBLE, UNPROTECTED
OCCUPANCY:	398 PERSONS. SEE EGRESS & OCCUPANCY PLAN FOR ALL OCCUPANCY AREAS, EXIT SIZES, DISTANCES & LOCATIONS.
SPRINKLERS:	FULLY SPRINKLERED BUILDING
FIRE ALARM:	RELOCATED FIRE ALARM PANEL W/ NEW DEVICES THROUGHOUT BUILDING.
HEIGHT:	EXISTING ONE STORY BUILDING (NO CHANGE TO EXISTING BUILDING HEIGHT)

USE DESCRIPTION:

THE TENANT INTENDS TO OPERATE THE SPACE FOR CARDIO AND STRENGTH BASED PERSONAL FITNESS ACTIVITIES VIA CLUB MEMBERSHIPS. ADDITIONALLY, THE TENANT OFFERS TANNING AND MACHINE MASSAGE SERVICES AND SELLS MERCANDISE RELATED TO THE OPERATION OF A FITNESS CLUB (BOTTLED BEVERAGES, BRANDED T–SHIRTS, ETC).

WALLS & CEILING FINISHES NOTE:

–ALL ROOMS & ENCLOSED SPACES TO BE A MINIMUM OF CLASS 'C', PER ASTM E84 & IBC TABLE 803.11 EXCEPT HALL #136 IS TO BE A MINIMUM CLASS 'B' FINISH
–FLAME SPREAD INDEX TO BE 76–200; SMOKE DEVELOPED 0–450.

FLOOR FINISH & SURROUNDING MATERIALS NOTE:

–ALL FLOOR FINISHES TO COMPLY WITH IBC 804.
–ALL WALL AND FLOOR FINISHES AROUND THE PROPOSED TOILETS, URINALS AND SHOWERS COMPLY WITH IBC 1210.

INTERIOR ENVIRONMENT NOTE:

–THE RENOVATION HAS BEEN DESIGNED FOR TEMPERATURE CONTROL PER IBC 1204 AND INTERIOR LIGHTING IN ALL HABITABLE SPACES PER IBC 1205.

CONSTRUCTION SCOPE OF WORK DESCRIPTION:

–TENANT IMPROVEMENT RENOVATION OF AN ENTIRE EXISTING BUILDING FOR A NEW GYMNASIUM TENANT. AREAS IN THE BUILDING WILL INCLUDE AN ENTRANCE VESTIBULE, NEW RECEPTION AREA, AN OPEN GYM WORKOUT AREA WITH CARDIO MACHINES, STRENGTH MACHINES AND STRETCHING MACHINES, INDIVIDUAL USE TANNING BOOTHS AND BEDS, INDIVIDUAL USE COLLAGEN THERAPY BOOTHS, VIBRATING MASSAGE BEDS, SEPARATE MEN'S AND WOMEN'S LOCKER ROOMS, TOILET AND SHOWER ROOMS, JANITOR'S CLOSETS AND UTILITY ROOMS.
–INSTALLATION OF NEW FLOOR, WALL AND CEILING FINISHES THROUGHOUT.

ROOF ACCESS NOTE:

–THE BUILDING WILL BE PROVIDED WITH A NEW ROOF ACCESS LADDER & HATCH AS PART OF THE RENOVATION.

SPECIAL INSPECTIONS NOTE:

–THE FOLLOWING ITEMS REQUIRE SPECIAL STRUCTURAL INSPECTIONS PER THE BUILDING OFFICIAL:

–STEEL CONSTRUCTION
–EPOXY SYSTEM CONSTRUCTION

THE GENERAL CONTRACTOR SHALL COORDINATE W/ THE OWNER'S HIRED STRUCTURAL SPECIAL INSPECTION AGENCY, KRAZAN & ASSOCIATES, INC. FOR ALL SITE INSPECTIONS. CONTACT VIJAY CHAUDHARY AT 253–939–2500

DEFERRED SUBMISSION NOTE:

–THE GENERAL CONTRACTOR'S FIRE SPRINKLER CONTRACTOR SHALL SUBMIT SIGNED AND SEALED FIRE SPRINKLER DRAWINGS AND HYDRAULIC CALCULATIONS TO THE AUTHORITY HAVING JURISDICTION AS A DEFERRED SUBMISSION FOR PERMIT ISSUANCE.
–THE GENERAL CONTRACTOR'S FIRE ALARM CONTRACTOR SHALL SUBMIT SIGNED AND SEALED FIRE ALARM DRAWINGS TO THE AUTHORITY HAVING JURISDICTION AS A DEFERRED SUBMISSION FOR PERMIT ISSUANCE.

PLUMBING FIXTURE QUANTITIES NOTE:

WATER CLOSETS:
199 MEN: 1 FIXTURE PER 125 PERSONS = 1.59 FIXTURES
(2 FIXTURES REQUIRED, 4 PROVIDED INCLUDING URINALS)
199 WOMEN: 1 FIXTURE PER 65 PERSONS = 3.06 FIXTURES
(4 FIXTURES REQUIRED, 4 PROVIDED)

LAVATORIES:
199 MEN: 1 FIXTURE PER 200 PERSONS = 0.995 FIXTURES
(1 FIXTURE REQUIRED, 3 PROVIDED)
199 WOMEN: 1 FIXTURE PER 200 PERSONS = 0.995 FIXTURES
(1 FIXTURE REQUIRED, 3 PROVIDED)

NOTE: IN ADDITION TO THE SEPARATE SEX PLUMBING FIXTURES LISTED ABOVE, AN ADDITIONAL ASSISTED USE TOILET ROOM, WITH ITS OWN WATER CLOSET & LAVATORY IS BEING PROVIDED.

DRINKING FOUNTAINS:
2 REQUIRED, 2 PROVIDED

SERVICE SINK:
1 REQUIRED, 2 PROVIDED

PROJECT MANAGEMENT

RHJ ASSOCIATES, P.C.

CONTACT: ROB TREGO JR., PROJECT MANAGER 484–928–0632
860 FIRST AVENUE, SUITE 9A, KING OF PRUSSIA PA 19460

DRAWING ENUMERATION

ARCHITECTURAL

MICHAEL J. PILKO, AIA

CONTACT: MICHAEL J. PILKO 610–337–4555
860 FIRST AVENUE, SUITE 9A, KING OF PRUSSIA PA 19460

2 1 COV	–	COVER SHEET / LOCATION MAPS / DRAWING ENUMERATION
E&O	–	EGRESS AND OCCUPANCY PLAN / ADA & LIFE SAFETY SIGNAGE DETAILS
D.1	–	DEMOLITION PLAN
1 A.1	–	FLOOR PLAN
A.2	–	ENLARGED "BLACK CARD SPA" PLAN / RECEPTION DESK DETAILS
2 A.3	–	ENLARGED LOCKER & TOILET ROOM PLAN / MISC. DETAILS
2 A.4	–	REFLECTED CEILING PLAN
2 A.5	–	FLOOR FINISH & EQUIPMENT LOCATION PLAN
2 A.6	–	TOILET & SHOWER ROOM ELEVATIONS
A.7	–	LOCKER ROOM ELEVATIONS / MILLWORK DETAILS / MISC. DETAILS
2 A.8	–	MISC. DETAILS / SOFFIT DETAILS / FINISH SELECTION
2 A.9	–	FINISH SCHEDULE / DOOR SCHEDULE / WINDOW SCHEDULE
2 A.10	–	DECORATIVE SIGNAGE & TEL–DATA–CATV LOCATION PLAN & SCHEDULE
A.11	–	INTERIOR ELEVATIONS
A.12	–	INTERIOR ELEVATIONS
2 A.13	–	INTERIOR ELEVATIONS
A.14	–	ROOF LADDER AND HATCH DETAILS / SOFFIT DETAIL
A.15	–	GENERAL CONDITIONS SPECIFICATION

STRUCTURAL ENGINEERING

DIBBLE ENGINEERS, INC.

CONTACT: TRAVIS COLLIANDER 425–828–4200
1029 MARKET STREET, KIRKLAND, WA 98033

S1.0	–	STRUCTURAL GENERAL NOTES & MISC. DETAILS
S2.0	–	STRUCTURAL ROOF AND WALL FRAMING PLAN
S3.0	–	STRUCTURAL SECTIONS & DETAILS

MECHANICAL, PLUMBING, FIRE PROTECTION, AND ELECTRICAL ENGINEERS

AKRIBIS ENGINEERING, L.L.C.

CONTACT: SHELDON MCINELLY, P.E. 602–393–0201 x223
3231 S. COUNTRY CLUB WAY, SUITE 102, TEMPE AZ 85282

1 M1.0	–	MECHANICAL SPECIFICATION, TABLES & DETAILS
1 M1.1	–	MECHANICAL PLAN
1 M1.2	–	MECHANICAL DESIGN SUMMARY & PERMIT CHECKLIST SHEETS
1 P1.0	–	PLUMBING SPECIFICATION, SCHEDULES & CALCULATIONS
P1.1	–	PLUMBING PLAN – WASTE, VENT & GAS
1 P1.2	–	PLUMBING PLAN – WATER
1 P1.3	–	PLUMBING ISOMETRICS
FP.1	–	FIRE PROTECTION PERFORMANCE SPECIFICATION, NOTES & DETAILS
FP.2	–	FIRE PROTECTION PERFORMANCE SPECIFICATION PLAN
1 E2.1	–	ELECTRICAL LIGHTING PLAN
1 E2.2	–	ELECTRICAL INTERIOR LIGHTING SUMMARY, FIXTURE SCHEDULE & WIRING DIAGRAMS
E3.1	–	ELECTRICAL POWER PLAN
1 E3.2	–	ELECTRICAL MECHANICAL / POWER PLAN
E4.1	–	ELECTRICAL FIRE ALARM PLAN
E5.1	–	ELECTRICAL SPECIFICATION / ONE–LINE DIAGRAM / CALCULATIONS
1 E5.2	–	ELECTRICAL PANEL SCHEDULES

LANDLORD:
BOARDMAN TAPPS, LLC
d/b/a BOARDMAN INVESTMENTS, LLC
ATTN: SHANE JIMENEZ
802 W. BANNOCK STREET, 12TH FLOOR
BOISE, ID 83702

PLANET FITNESS FRANCHISEE:
JEG–VIPER BONNEY LAKE, LLC
d/b/a PLANET FITNESS
c/o JOHN WILLIAMS
2800 SOUTHAMPTON ROAD
PHILADELPHIA, PA 19154
215–429–7318
john.williams@planetfitness.com

PROPOSED RENOVATION FOR:

PLANET FITNESS

19516 STATE ROUTE 410E
BONNEY LAKE, WASHINGTON 98391

MICHAEL J. PILKO, ARCHITECT
860 FIRST AVE, SUITE 9A
KING OF PRUSSIA, PA 19406
484-928-0650

10965 REGISTERED ARCHITECT
MICHAEL J. PILKO
STATE OF WASHINGTON

RHJ ASSOCIATES, P.C.
PROJECT MANAGEMENT
860 1ST AVE, SUITE 9A
KING OF PRUSSIA, PA 19406
610 337 4555
www.rhjassoc.com

DATE: 5/19/2017

REVISIONS	
1	PERMIT COMMENTS 8/01/2017
2	TENANT CHANGES 8/08/2017

COV

2017–0105

Y:\Planet Fitness_JEG Viper_Bonney Lake WA_CD&CA_2017-0105\Drawings\Rev #2\COVER.dwg

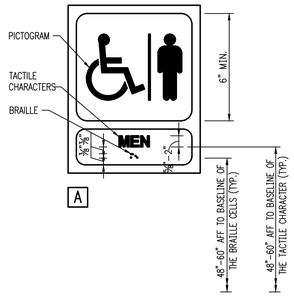

THIS VINYL STICKER SIGN TO BE BLACK LETTERS ON A WHITE BACKGROUND. SIGN TO BE POSTED DIRECTLY TO THE ALUMINUM MULLION DIRECTLY ABOVE THE DOOR HEADS. MOUNT ON CENTER TO THE DOOR OPENING. FONT TO BE BOLD ARIAL.

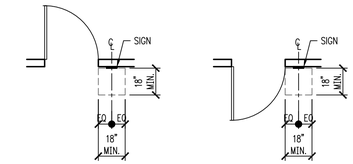

NOTE: ALL ADA SIGNAGE TO BE BLACK BACKGROUND W/ WHITE LETTERING.

ALL SIGNAGE TO COMPLY WITH THE 2010 ADA STANDARDS FOR ACCESSIBLE DESIGN.

G.C. TO SUPPLY & INSTALL ALL ADA & LIFE SAFETY SIGNAGE SHOWN.

2 ADA & LIFE SAFETY SIGNAGE DETAILS & MOUNTING DIAGRAMS

N.T.S.

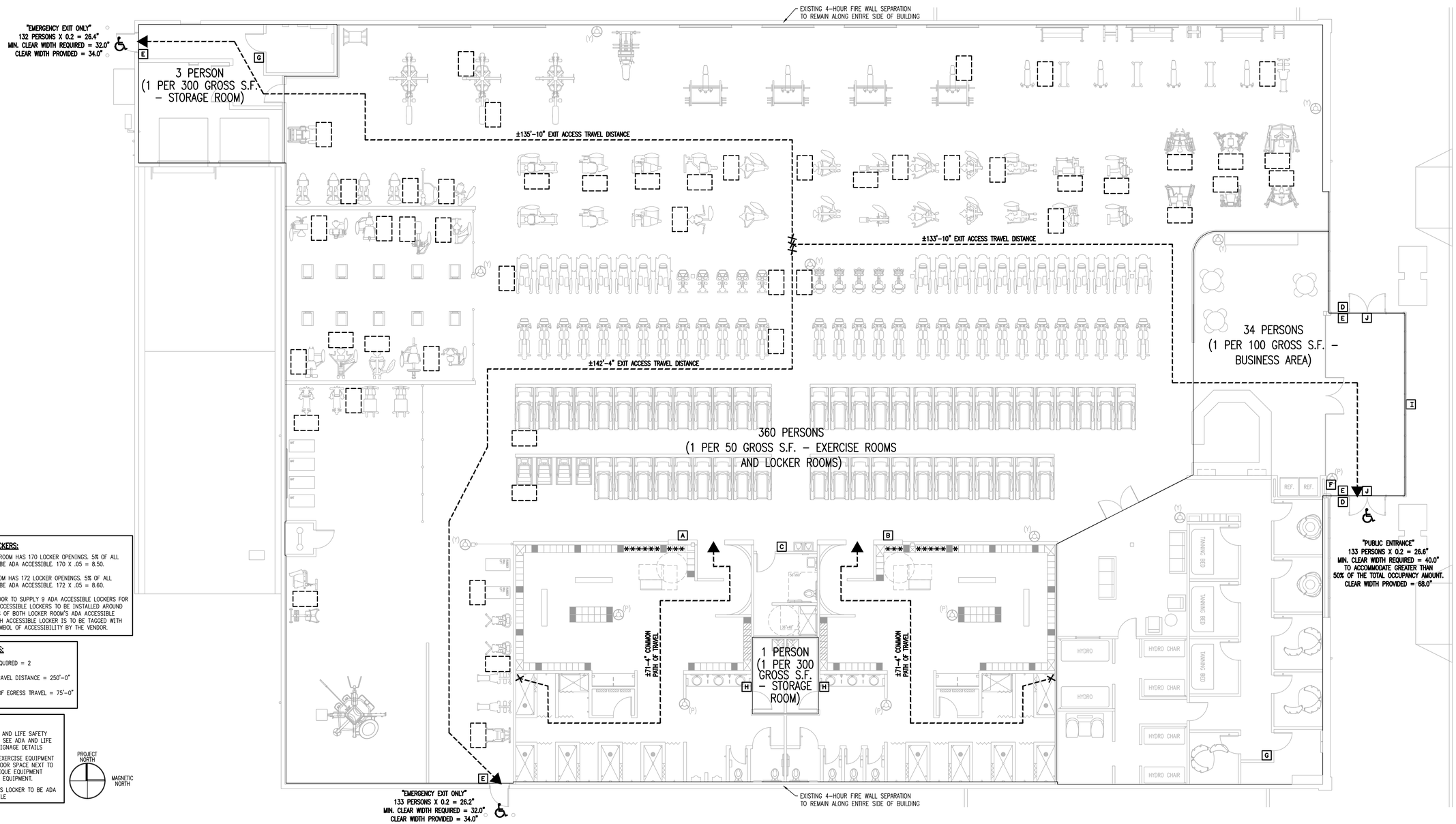

ADA ACCESSIBLE LOCKERS:

THE WOMEN'S LOCKER ROOM HAS 170 LOCKER OPENINGS. 5% OF ALL LOCKER OPENINGS TO BE ADA ACCESSIBLE. 170 X .05 = 8.50.

THE MEN'S LOCKER ROOM HAS 172 LOCKER OPENINGS. 5% OF ALL LOCKER OPENINGS TO BE ADA ACCESSIBLE. 172 X .05 = 8.60.

TENANT'S LOCKER VENDOR TO SUPPLY 9 ADA ACCESSIBLE LOCKERS FOR EACH LOCKER ROOM. ACCESSIBLE LOCKERS TO BE INSTALLED AROUND THE SHOWN LOCATIONS OF BOTH LOCKER ROOM'S ADA ACCESSIBLE CHANGING BENCH. EACH ACCESSIBLE LOCKER IS TO BE TAGGED WITH AN INTERNATIONAL SYMBOL OF ACCESSIBILITY BY THE VENDOR.

EXIT ACCESS CODES:

–NUMBER OF EXITS REQUIRED = 2 (4 PROVIDED)
–MAX. EXIT ACCESS TRAVEL DISTANCE = 250'–0" (±142'–4" PROVIDED)
–MAX. COMMON PATH OF EGRESS TRAVEL = 75'–0" (±71'–4" PROVIDED)

SYMBOLS LEGEND:

- B — NEW ADA AND LIFE SAFETY SIGN I.D. SEE ADA AND LIFE SAFETY SIGNAGE DETAILS
- 30"x48" EXERCISE EQUIPMENT CLEAR FLOOR SPACE NEXT TO EACH UNIQUE EQUIPMENT PIECE OF EQUIPMENT.
- * — INDICATES LOCKER TO BE ADA ACCESSBILE

PROJECT NORTH
MAGNETIC NORTH

1 EGRESS & OCCUPANCY PLAN

SCALE: 1/8" = 1'-0"

PROPOSED RENOVATION FOR:

PLANET FITNESS

19516 STATE ROUTE 410E
BONNEY LAKE, WASHINGTON 98391

MICHAEL J. PILKO, ARCHITECT
860 FIRST AVE, SUITE 9A
KING OF PRUSSIA, PA 19406
484-928-0650

10965 REGISTERED ARCHITECT
MICHAEL J. PILKO
STATE OF WASHINGTON

RHJ ASSOCIATES, P.C.
PROJECT MANAGEMENT
860 1ST AVE SUITE 9A
KING OF PRUSSIA, PA 19406
610 337 4555
www.rhjassoc.com

DATE: 5/19/2017

REVISIONS

E&O

2017–0105

Y:\Planet Fitness_JEG Viper_Bonney Lake WA_CD&CA_2017-0105\Drawings\Rev #2\ED-A01-A0x.dwg

WALL & SYMBOLS LEGEND:

- EXISTING WALL TO REMAIN.
- EXISTING WALL AND/OR BUILT-IN FIXTURE TO BE REMOVED.
- EXISTING DOOR & FRAME TO REMAIN.
- EXISTING DOOR & FRAME TO BE REMOVED UNLESS NOTED OTHERWISE.
- EXISTING EXIT SIGN TO BE REMOVED.
- EXISTING REMOTE EMERGENCY LIGHT FIXTURE TO BE REMOVED.
- EXISTING EMERGENCY BATTERY PACK W/ TWO HEADS TO BE REMOVED.
- EXISTING PULL STATION TO BE REMOVED. FIXTURES MAY BE SAVED FOR RELOCATION IF SALVAGEABLE.
- EXISTING HORN/STROBE TO BE REMOVED. FIXTURES MAY BE SAVED FOR RELOCATION IF SALVAGEABLE.
- FE — EXISTING FIRE EXTINGUISHER TO BE REMOVED AND SAVED FOR RELOCATION IF TAGS ARE NOT EXPIRED. DISCARD IF TAGS ARE EXPIRED.
- EXISTING CEILING MOUNTED EMERGENCY HORN/STROBE TO BE REMOVED. FIXTURES MAY BE SAVED FOR RELOCATION IF SALVAGEABLE.
- T — EXISTING THERMOSTAT TO BE REMOVED AND SAVED FOR RELOCATION UNLESS THERMOSTATS CAN'T ACCEPT NEW REMOTE SENSORS. DISCARD THERMOSTATS IF THEY CAN'T ACCEPT NEW REMOTE SENSORS.

DEMOLITION NOTES:

1. REMOVED EQUIPMENT SHALL BECOME THE PROPERTY OF THE CONTRACTOR AND SHALL BE PROMPTLY REMOVED FROM THE SITE.
2. ALL FLOOR SLAB PROTRUSIONS ARE TO BE GROUND SMOOTH AND FLUSH WITH THE ADJACENT FLOOR. ALL FLOOR SLAB RECESSES AND EXISTING PITCHED FLOOR SLAB AREAS ARE TO BE FILLED FLUSH & LEVEL WITH THE ADJACENT FLOOR. SHOT BLAST THE ENTIRE FLOOR SLAB WITHIN THE SUITE IN PREPARATION OF A SMOOTH AND LEVEL SLAB SURFACE SUITABLE FOR NEW FLOOR FINISH INSTALLATION.
3. ALL EXISTING SURFACES DAMAGED AS A RESULT OF DEMOLITION SHALL BE PATCHED & REPAIRED BACK TO ITS FORMER CONDITION WITHOUT ADDITIONAL COST TO THE OWNER.
4. IT SHALL BE THE RESPONSIBILITY OF THE CONTRACTOR TO TAKE ALL NECESSARY PRECAUTIONS TO INSURE THE SAFETY OF ALL EXISTING ELEMENTS DURING ALL PHASES OF WORK.
5. FOLLOW ALL APPLICABLE FEDERAL, OSHA, STATE AND LOCAL REGULATIONS.
6. ALL DEMOLITION DEBRIS IS TO BE REMOVED FROM THE SITE ON A DAILY BASIS. CONTRACTOR TO COORDINATE WITH BUILDING OWNER FOR DUMPSTER LOCATION.
7. G.C. TO PROVIDE TEMPORARY LIGHTING AS REQUIRED.
8. REMOVE ANY ABANDONED STACK VENTS, THROUGH ROOF FLUE VENTS & EXHAUST FANS ABOVE THE SUITE. PATCH & REPAIR ROOF DECK, ROOF INSULATION & ROOF MEMBRANE AS REQUIRED TO MATCH & ALIGN W/ EXISTING AT ALL LOCATIONS.
9. ANY ABANDONED SANITARY LINES ARE TO BE CAPPED BELOW THE FLOOR SLAB LEVEL.
10. REMOVE ANY ABANDONED LINES, LOW VOLTAGE WIRING, SWITCHES, CONDUITS, RECEPTACLES, TEL/DATA WIRING, PLUGMOLD & PUNCH BLOCKS. G.C. SHALL TRACE ALL ELECTRICAL CONDUIT LINES TO VERIFY THEY AREN'T SERVING CANOPY LIGHTS, SITE LIGHTING ETC. LOCATED OUTSIDE OF THE SUITE.
11. REMOVE ANY ABANDONED STOREFRONT SIGNAGE & VINYL GRAPHICS
12. REMOVE ALL FLOOR MOUNTED/RECESSED JUNCTION BOXES, PROTRUSIONS, FLOOR DRAINS ETC.
13. EXISTING SPRINKLER MAIN TO REMAIN. SPRINKLER HEADS TO BE REWORKED THROUGHOUT THE SUITE TO ACCOMMODATE THE NEW LAYOUT. SEE THE FIRE PROTECTION DRAWINGS.
14. G.C. TO PROVIDE TEMPORARY TOILET FACILITIES.
15. REMOVE ALL ABANDONED UNI-STRUT, HANGING ROD'S ETC.
16. REMOVE ALL FLOOR FINISHES & WALL BASE.
17. REMOVE ALL WAINSCOTING & WALL FINISHES INCLUDING BUT NOT LIMITED TO FRP, CERAMIC TILE ETC. REMOVE ALL ABANDONED WALL & FLOOR MOUNTED ACCESSORIES LEFT ABANDONED BY THE PERVIOUS TENANT.
18. REMOVE ALL LIGHTS, EXCEPT THE EXISTING FLUORESCENT LIGHT IN THE REAR PRE-MANUFACTURED ELECTRICAL ROOM.
19. REMOVE ALL DROP CEILING SYSTEMS, DRYWALL SOFFITS & DRYWALL CEILING SYSTEMS. REMOVE ALL CEILING SUPPORT FRAMING, HANGING RODS & WIRES, ETC.
20. REMOVE ANY ABANDONED SPEAKER SYSTEM, TV'S, ETC.
21. REMOVE ALL EXIT & EMERGENCY FIXTURES, PULL STATIONS & HORN/STROBES DEVICES.
22. ALL HVAC UNITS SERVING THE SUITE ARE TO BE REMOVED. PATCH & REPAIR ROOF DECK, ROOF INSULATION & ROOF MEMBRANE AS REQUIRED TO MATCH & ALIGN W/ EXISTING AT ALL LOCATIONS UNLESS R.T.U. OPENING IS TO BE REUSED FOR A NEW HVAC UNIT PER THE MECHANICAL DRAWINGS. SAVE THERMOSTATS FOR RELOCATION UNLESS THERMOSTATS CAN'T ACCEPT NEW REMOTE SENSORS.
23. REMOVE ANY CORNER GUARDS FROM WALLS THAT ARE REMAINING.
24. REMOVE ALL ABANDONED MERCHANDISE SALES RACKS, DISPLAY RACKS, DISPLAY CASES, STORAGE RACKS & SYSTEMS, SHELVING, SLIDING STORAGE SYSTEMS & TRACKS, ETC.
25. REMOVE ALL SLAT WALL, PEG BOARD, WHITE BOARDS ETC.
26. REMOVE ALL GAS PIPING BACK TO THE GAS SERVICE ENTRANCE IN PREPARATION OF A NEW OR UPGRADED GAS SERVICE TO THE SUITE.

PROJECT NORTH
MAGNETIC NORTH

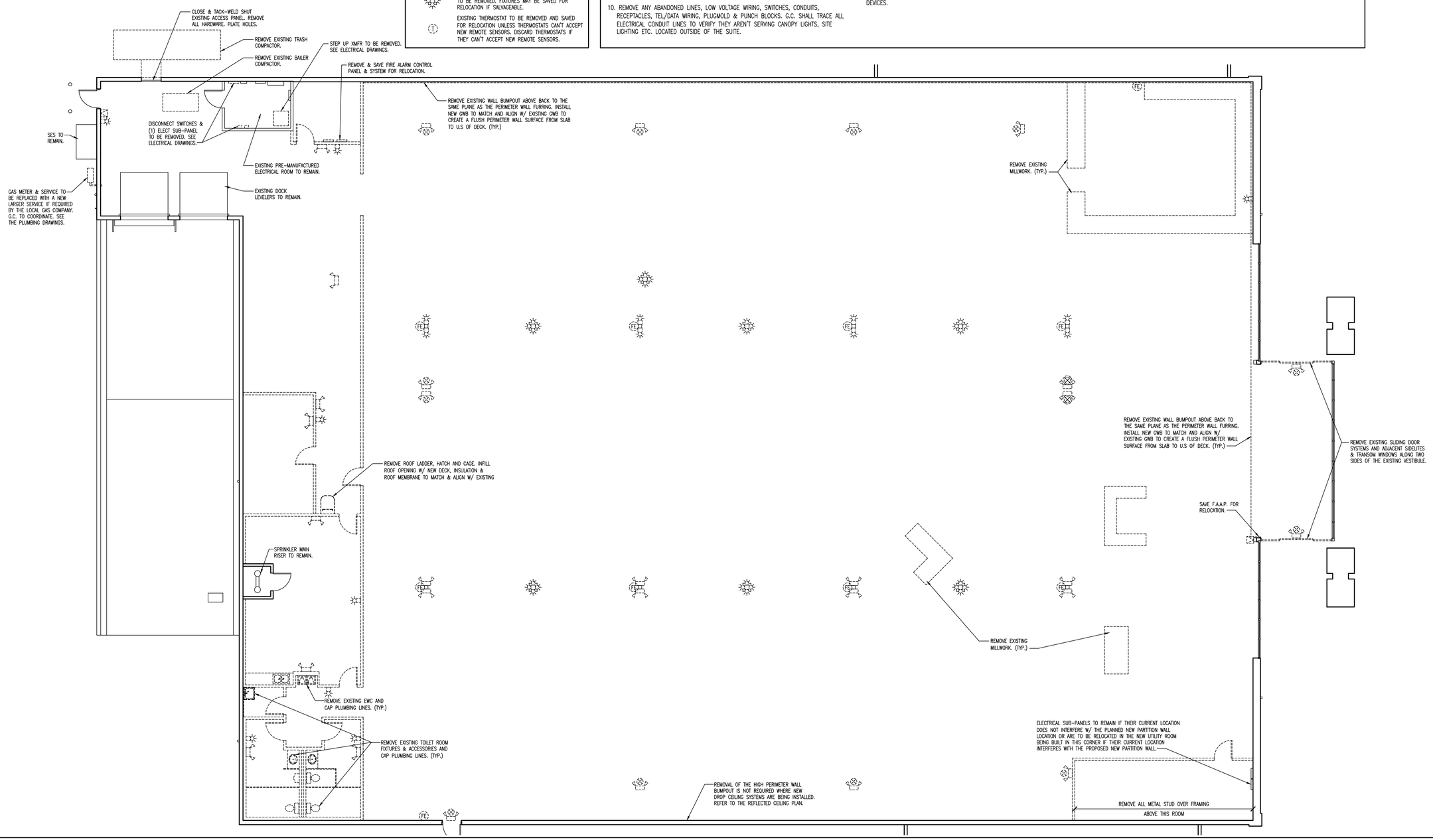

1 DEMOLITION FLOOR PLAN

SCALE: 1/8" = 1'-0"

PROPOSED RENOVATION FOR:

PLANET FITNESS

19516 STATE ROUTE 410E
BONNEY LAKE, WASHINGTON 98391

MICHAEL J. PILKO, ARCHITECT
860 FIRST AVE, SUITE 9A
KING OF PRUSSIA, PA 19406
484-928-0650

10965 REGISTERED ARCHITECT
MICHAEL J. PILKO
STATE OF WASHINGTON

RHJ ASSOCIATES, P.C.
PROJECT MANAGEMENT
860 1ST AVE, SUITE 9A
KING OF PRUSSIA, PA 19406
610 337 4555
www.rhjassoc.com

DATE: 5/19/2017

REVISIONS

D.1

2017-0105

Y:\Planet Fitness_JEG Viper_Bonney Lake WA_CD&CA_2017-0105\Drawings\Rev #2\ED-A01-A0x.dwg

WALL LEGEND:

- EXISTING WALL TO REMAIN. PATCH & REPAIR AS REQUIRED.
- (1) NEW PARTITION WALL: 3⅝" (20) GAUGE METAL STUDS @ 16" O.C. MAX. W/ (1) LAYER ⅝" GWB EACH SIDE TO 4" ABOVE DROP CEILING SYSTEM. BRACE TO DECK ABOVE AT 4'-0" O.C. INSTALL ⅝" DUROCK CEMENT BOARD IN LIEU OF GWB IN ALL SHOWER ALCOVES.
- (2) NEW LOW PARTITION WALL: NEW METAL STUD LOW PARTITION WALL. SEE 2/A.3 FOR WALL'S COMPOSITION.
- (3) NEW INSULATED PARTITION WALL: 3⅝" (20) GAUGE METAL STUDS @ 16" O.C. MAX. W/ (1) LAYER ⅝" GWB EACH SIDE & 3½" BATT INSULATION TO 4" ABOVE DROP CEILING SYSTEM. BRACE TO DECK ABOVE AT 4'-0" O.C. INSTALL ⅝" DUROCK CEMENT BOARD IN LIEU OF GWB IN ALL SHOWER ALCOVES.
- (4) NEW INSULATED FULL HEIGHT PARTITION WALL: 6" (20) GAUGE METAL STUDS @ 16" O.C. MAX. W/ FULL HEIGHT 3½" BATT INSULATION & (1) LAYER ⅝" GWB EACH SIDE TO U.S. OF ROOF DECK ON OPEN CEILING SIDES AND TO 4" ABOVE DROP CEILING SYSTEMS ON DROP CEILING SIDES. TOP TRACK SHALL BE A DEFLECTION TRACK.
- (4A) NEW FULL HEIGHT PARTITION WALL: SAME AS (4) EXCEPT NO BATT INSULATION
- (5) NEW INSULATED FULL HEIGHT PARTITION WALL W/ LOW WALL BUMPOUT: SEE 9/A.7 FOR WALL'S COMPOSITION.
- (6) NEW 7'-6" TALL PARTITION WALL: 3⅝" (20) GAUGE METAL STUDS @ 16" O.C. MAX. W/ (1) LAYER ⅝" GWB EACH SIDE TO 7'-6" A.F.F. TOP WITH P.LAM #2 FINISHED 2" THICK PLYWOOD CAP.
- (7) NEW THICK PARTITION WALL: 6" (20) GAUGE METAL STUDS @ 16" O.C. MAX. W/ (1) LAYER ⅝" GWB EACH SIDES TO 4" ABOVE DROP CEILING. BRACE TO DECK ABOVE AT 4'-0" O.C.
- (8) EXTEND EXISTING PARTITION WALL: EXTEND THE HEIGHT OF THE EXISTING PARTITION WALL AS REQUIRED TO 4" ABOVE THE NEW DROP CEILING SYSTEM HEIGHT WHERE ADJACENT DROP CEILINGS ARE OCCURRING OR TO THE U.S. OF THE EXPOSED ROOF DECK AT ADJACENT OPEN CEILING AREAS W/ (20) GAUGE METAL STUDS AT 16" O.C. MAX. & (1) LAYER GWB ON THE EXPOSED SIDES TO MATCH & ALIGN W/ THE EXISTING WALL SYSTEM.
- (9) FURROUT EXISTING PERIMETER WALL: FURROUT EXISTING PERIMETER EXPOSED CONCRETE WALL SYSTEMS W/ ⅝" METAL HAT TRACKS AT 16" O.C. MAX. & (1) LAYER ⅝" GWB FROM SLAB TO 4" ABOVE THE NEW ADJACENT DROP CEILING SYSTEMS OR TO THE U.S. OF THE EXPOSED ROOF DECK WHERE ADJACENT NEW DROP CEILINGS ARE NOT BEING INSTALLED.

SYMBOLS LEGEND:

- (2) DOOR I.D. – SEE DOOR SCHEDULE
- (A) NEW WINDOW I.D. – SEE WINDOW SCHEDULE
- (S) NEW WALL I.D. – SEE WALL LEGEND
- [102] ROOM I.D. – SEE FINISH SCHEDULE
- NEW 'LED' EXIT SIGN. SEE ELECTRICAL DWGS.
- NEW 'LED' EXIT SIGN W/ (2) EMERGENCY HEADS. SEE ELECTRICAL DWGS.
- NEW WALL MOUNTED EMERGENCY STROBE. SEE ELECTRICAL DWGS.
- NEW WALL MOUNTED EMERGENCY HORN/STROBE. SEE ELECTRICAL DWGS.
- NEW CEILING MOUNTED EMERGENCY HORN/STROBE. SEE ELECTRICAL DWGS.
- NEW PULL STATION. SEE ELECTRICAL DWGS.
- NEW EMERGENCY BATTERY PACK W/ (2) HEADS. SEE ELECTRICAL DWGS.
- NEW DUAL REMOTE HEADS. SEE ELECTRICAL DWGS.
- OWNER SUPPLIED WASTE CANISTER. G.C. TO INSTALL. (Y) = YELLOW CANISTER LOCATION (P) = PURPLE CANISTER LOCATION
- (C) OWNER SUPPLIED LOW VOLTAGE/WiFi SECURITY CAMERA. G.C. TO INSTALL AT A HEIGHT SPECIFIED BY THE TENANT.

CLEAN WINDOW NOTE:

G.C. TO CLEAN ALL WINDOWS THROUGHOUT BUILDING AT END OF JOB.

OWNER SUPPLIED COORDINATION NOTE:

G.C. IS RESPONSIBLE TO COORDINATE WITH TENANT FOR ALL TENANT SUPPLIED MATERIALS ARRIVING TO THE SITE. ALL ITEMS TO BE STORED INSIDE.

FINISH LEVEL:

ALL EXISTING & NEW DRYWALL WALL AND SOFFIT SURFACES TO BE PREPARED TO ACHIEVE AND RECEIVE A "LEVEL 4" FINISH.

ELECTRICAL RECEPTACLE LABELING AND CONDUIT PAINTING NOTE:

EACH RECEPTACLE TO BE INDIVIDUALLY LABELED TO IDENTIFY ITS PANEL AND CIRCUIT.

ALL EXPOSED ELECTRICAL LINES INSTALLED ALONG EXPOSED CEILING DECK AREAS TO BE INSTALLED IN CONDUIT AS HIGH AS POSSIBLE ALONG U.S OF THE ROOF DECK. G.C. TO PAINT CONDUIT TO MATCH THE CEILING FINISH.

ALL RECEPTACLE & SWITCH PLATES TO BE STAINLESS STEEL FINISHED. ALL DEVICES BEHIND THE PLATES TO BE BLACK.

TRENCH SLAB NOTE:

G.C. TO TRENCH SLAB, GRAVEL BED, AND EARTH BELOW SLAB AS REQUIRED FOR THE INSTALLATION OF ALL NEW SANITARY LINES & UNDERSLAB CONDUIT LINES AS REQUIRED. G.C. SHALL VERIFY EXACT EXISTING SANITARY SEWER CONNECTION POINT, DIRECTION OF FLOW AND DEPTH IN FIELD. ALL UNDERSLAB LINES TO BE TESTED PRIOR TO BEING INFILLED.

G.C. TO INFILL TRENCHED SLAB AREAS W/ COMPACTED EARTH, GRAVEL BASE, 6 MIL VAPOR BARRIER AND CONCRETE TO MATCH & ALIGN W/ EXISTING. SLAB INFILL TO BE 3,000 PSI, 5 SACK CONCRETE MIX, ¾" AGGREGATE, #6 WOVEN WIRE MESH, & WITH #4 STEEL REINFORCING DOWELS 8" MINIMUM EMBEDMENT INTO EXISTING CONCRETE SLAB @ 2'-0" O.C., TIED TO #6 WOVEN WIRE MESH.

WOOD BLOCKING NOTE:

G.C. SHALL INSTALL FIRE TREATED WOOD BLOCKING IN WALLS IN ORDER TO SUPPORT THE TENANT'S TV'S, GRAB BARS & TOILET ROOM ACCESSORIES AS REQUIRED.

PROJECT NORTH
MAGNETIC NORTH

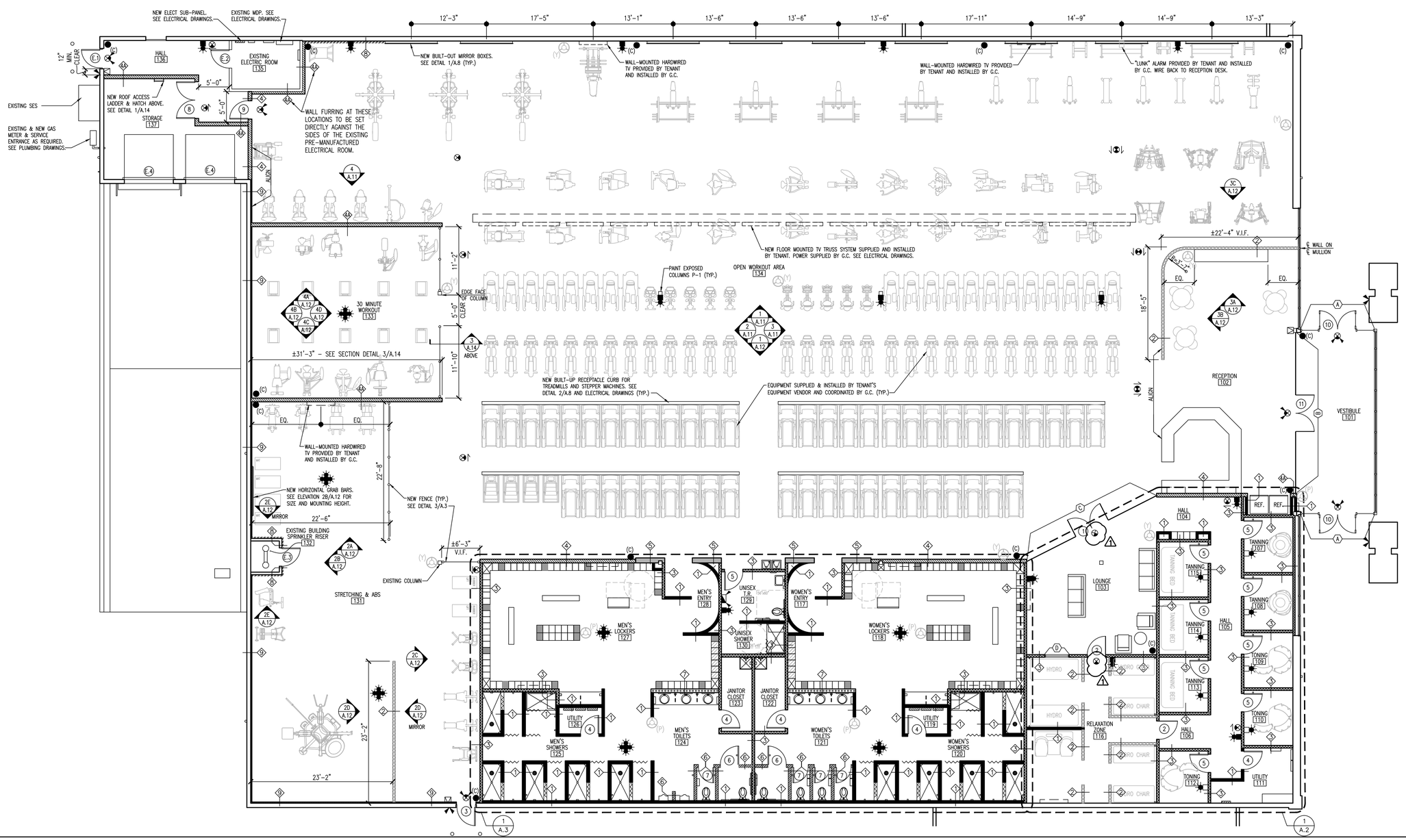

1 FLOOR PLAN

SCALE: 1/8" = 1'-0"

PROPOSED RENOVATION FOR:

PLANET FITNESS

19516 STATE ROUTE 410E
BONNEY LAKE, WASHINGTON 98391

MICHAEL J. PILKO, ARCHITECT
860 FIRST AVE, SUITE 9A
KING OF PRUSSIA, PA 19406
484-928-0650

10965 REGISTERED ARCHITECT
MICHAEL J. PILKO
STATE OF WASHINGTON

RHJ ASSOCIATES, P.C.
PROJECT MANAGEMENT
860 1ST AVE. SUITE 9A
KING OF PRUSSIA, PA 19406
610 337 4555
www.rhjassoc.com

DATE: 5/19/2017

REVISIONS

1	PERMIT COMMENTS	8/01/2017

A.1

2017-0105

H:\Planet Fitness_JEG Viper_Bonney Lake WA_CD&CA_2017-0105\Drawings\Rev #2\ED-A01-A0x.dwg

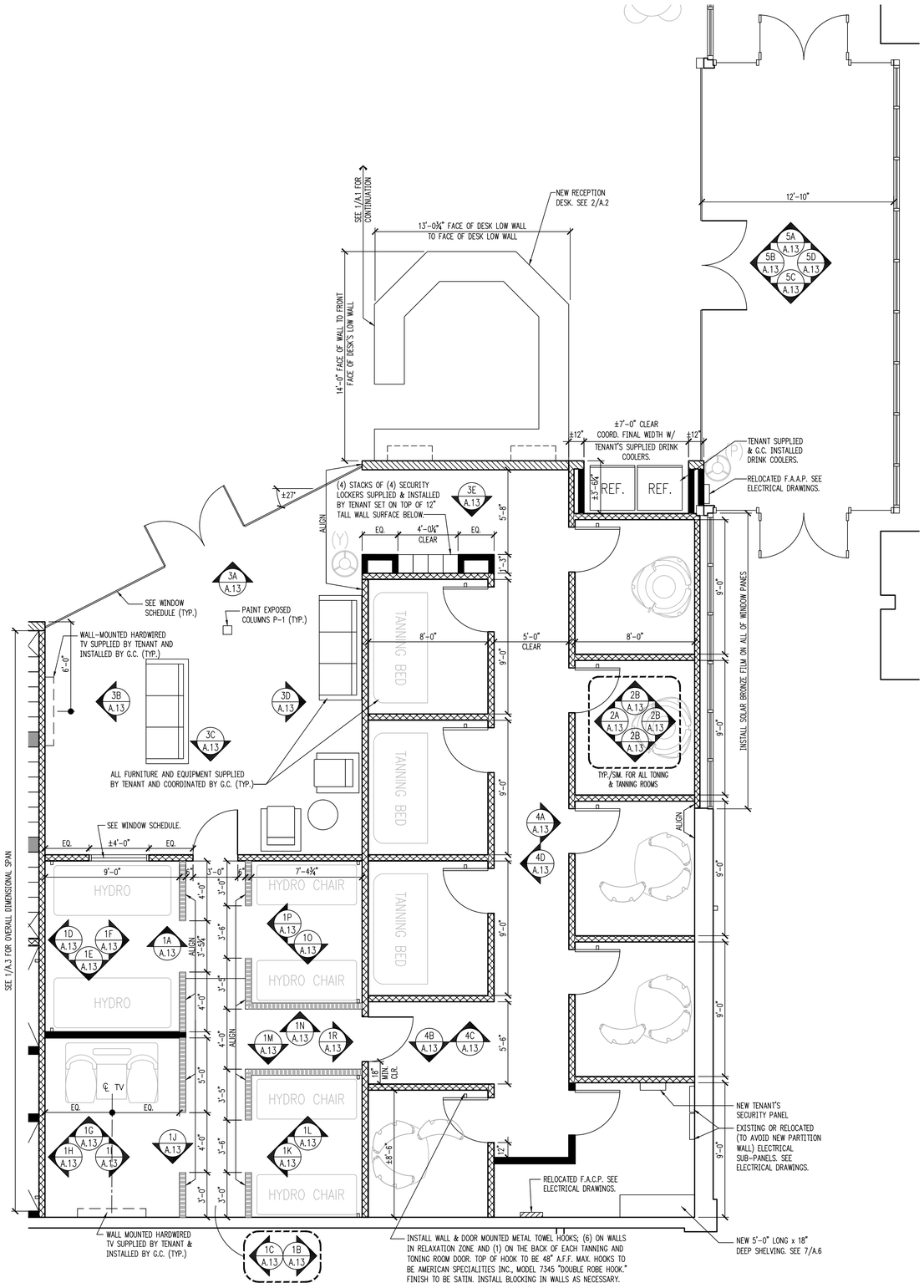

1 ENLARGED "BLACK CARD SPA" & RECEPTION AREA PLAN SCALE: 1/4" = 1'-0"

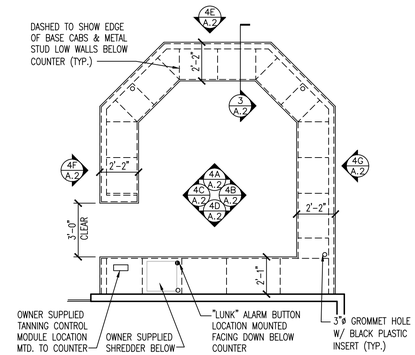

2 RECEPTION DESK SCALE: 1/4" = 1'-0"

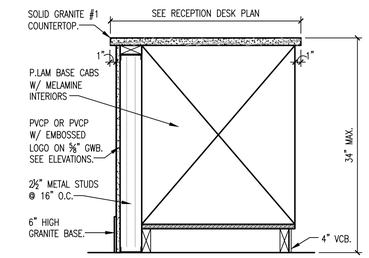

SCALE: 1" = 1'-0"

3 RECEPTION COUNTER DETAIL

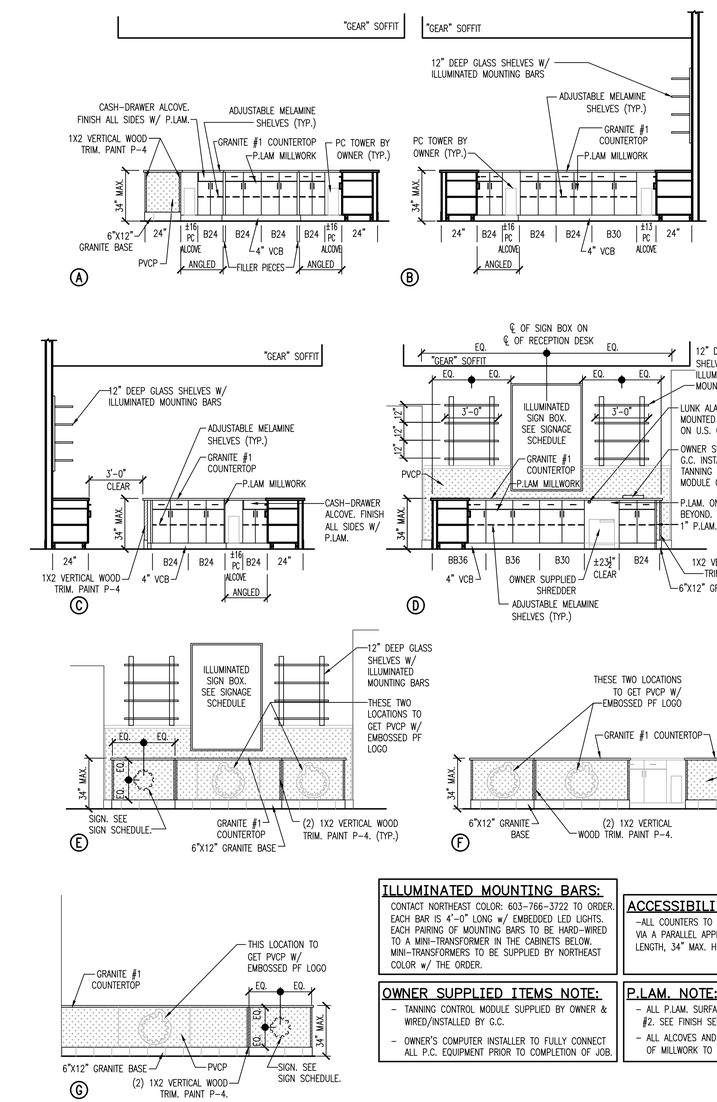

ILLUMINATED MOUNTING BARS:

CONTACT NORTHEAST COLOR: 603-766-3722 TO ORDER. EACH BAR IS 4'-0" LONG w/ EMBEDDED LED LIGHTS. EACH PAIRING OF MOUNTING BARS TO BE HARD-WIRED TO A MINI-TRANSFORMER IN THE CABINETS BELOW. MINI-TRANSFORMERS TO BE SUPPLIED BY NORTHEAST COLOR w/ THE ORDER.

ACCESSIBILITY NOTE:

-ALL COUNTERS TO BE ADA ACCESSIBLE VIA A PARALLEL APPROACH. 36" MIN. LENGTH, 34" MAX. HEIGHT.

OWNER SUPPLIED ITEMS NOTE:

- TANNING CONTROL MODULE SUPPLIED BY OWNER & WIRED/INSTALLED BY G.C.
- OWNER'S COMPUTER INSTALLER TO FULLY CONNECT ALL P.C. EQUIPMENT PRIOR TO COMPLETION OF JOB.

P.LAM. NOTE:

- ALL P.LAM. SURFACES TO BE P.LAM. #2. SEE FINISH SELECTIONS.
- ALL ALCOVES AND ALL EXPOSED SIDES OF MILLWORK TO RECEIVE P.LAM #2.

4 RECEPTION DESK ELEVATIONS SCALE: 1/4" = 1'-0"

PROPOSED RENOVATION FOR:

PLANET FITNESS

19516 STATE ROUTE 410E
BONNEY LAKE, WASHINGTON 98391

MICHAEL J. PILKO, ARCHITECT
860 FIRST AVE, SUITE 9A
KING OF PRUSSIA, PA 19406
484-928-0650

10965 REGISTERED ARCHITECT
MICHAEL J. PILKO
STATE OF WASHINGTON

RHJ ASSOCIATES, P.C.
PROJECT MANAGEMENT
860 1ST AVE, SUITE 9A
KING OF PRUSSIA, PA 19406
610 337 4655
www.rhjassoc.com

DATE: 5/19/2017

REVISIONS

A.2

2017-0105

Y:\Planet Fitness_JEG Viper_Bonney Lake WA_CD&CA_2017-0105\Drawings\Rev #2\ED-401-A0x.dwg

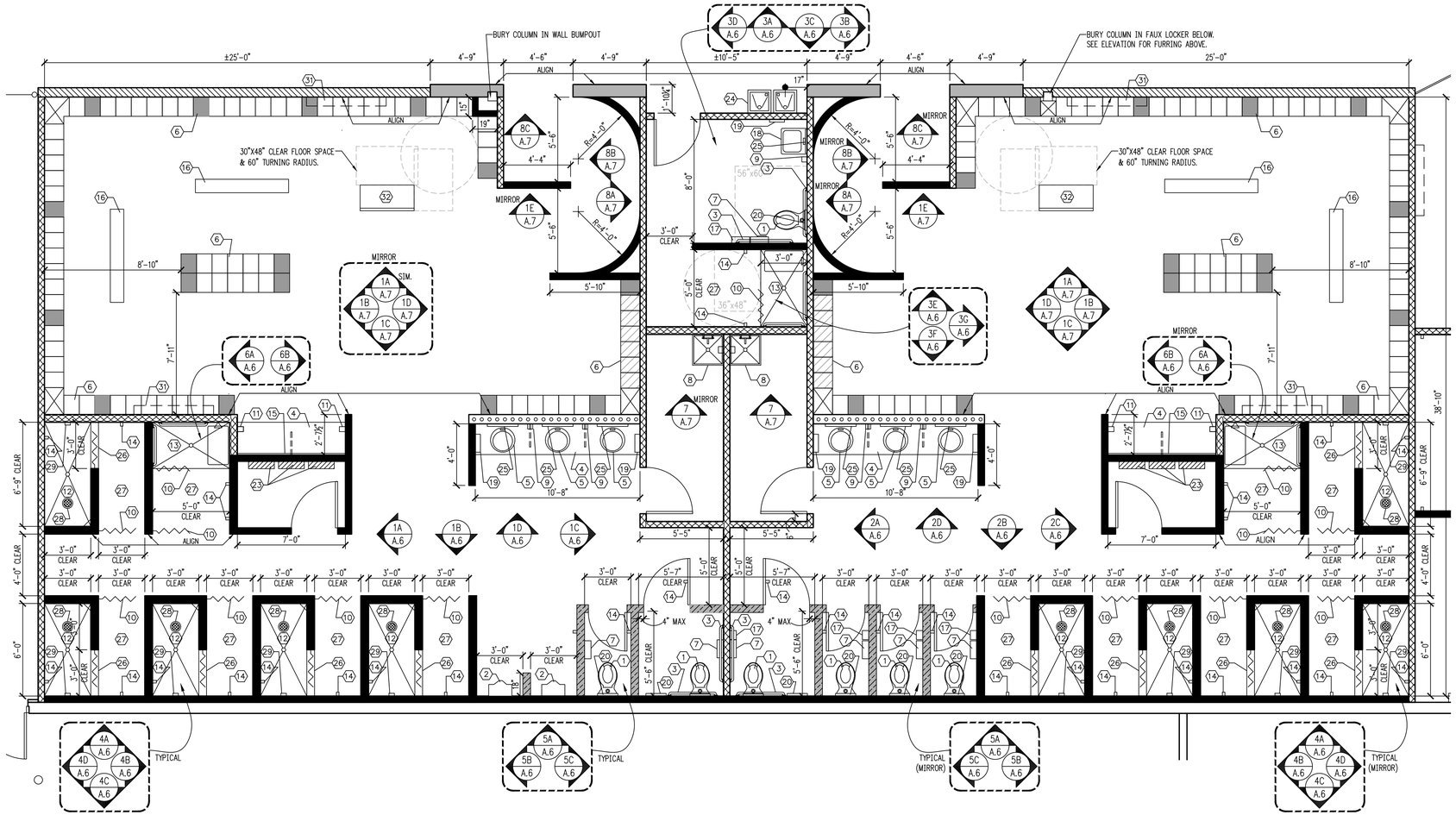

1 ENLARGED LOCKERS & TOILET ROOMS PLAN

SCALE: 1/4" = 1'-0"

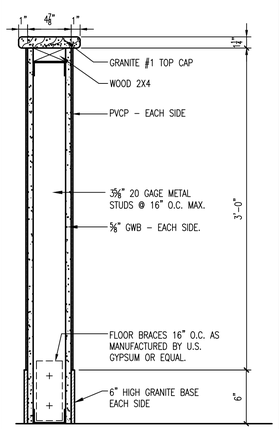

SCALE: 1-1/2" = 1'-0"

2 LOW WALL SECTION

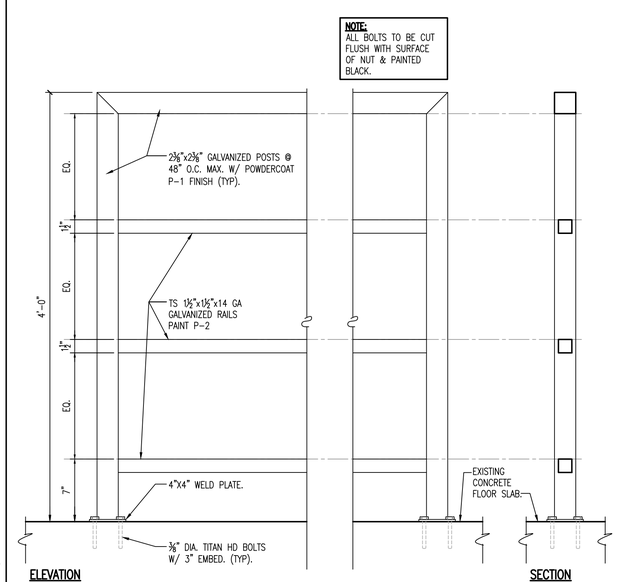

3 DECORATIVE FENCE DETAILS

SCALE: 1-1/2" = 1'-0"

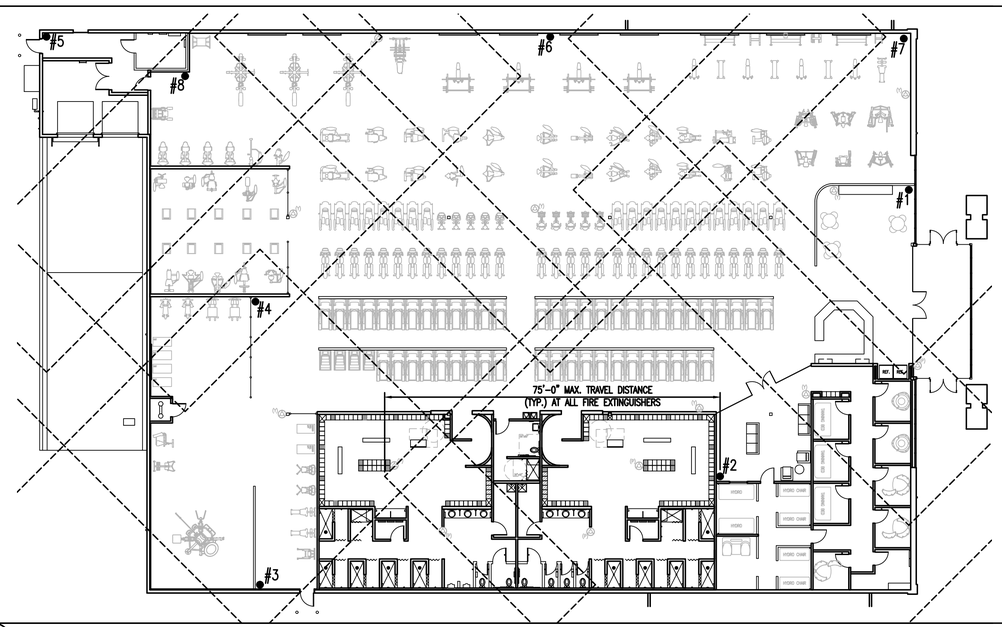

SYMBOLS LEGEND:

- NEW 2A-10BC TYPE WALL MOUNTED FIRE EXTINGUISHER BY G.C.

FIRE EXTINGUISHER NOTE:

PER IFC 2015, (8) FIRE EXTINGUISHERS SHALL BE REQUIRED FOR A SPACE OF 22,166 S.F. IN SIZE. (1 FIRE EXTINGUISHER PER 3,000 S.F.) MAXIMUM TRAVEL DISTANCE FROM ANY POINT IN THE SPACE TO A FIRE EXTINGUISHER SHALL BE 75' MAXIMUM.

4 FIRE EXTINGUISHER LOCATION PLAN

SCALE: 1/16" = 1'-0"

SYMBOLS LEGEND:

1. FLOOR MOUNTED WATER CLOSET W/ AUTOMATIC & MANUAL OVERRIDE FLUSH VALVE. SEE PLUMBING DRAWINGS.
2. WALL MOUNTED URINAL W/ AUTOMATIC & MANUAL OVERRIDE FLUSH VALVE. SEE PLUMBING DRAWINGS.
3. (1) 36", (1) 42" & (1) 18" ADA GRAB BARS BY "GRAINGER".
4. ONE PIECE GRANITE #2 COUNTER TOP W/ GRANITE #2 BACK & SIDE SPLASHES & GRANITE #2 APRON. SUPPORT LEGS TO BE P.LAM. #3.
5. UNDERMOUNTED VANITY BOWL & FAUCET W/ AUTOMATIC SENSOR. SEE PLUMBING DRAWINGS.
6. 6'H LOCKERS TO BE SUPPLIED & INSTALLED BY TENANT
7. JUMBO TOILET PAPER DISPENSER BY TENANT.
8. FLOOR MOUNTED MOP SINK. SEE PLUMBING DRAWINGS.
9. AUTOMATIC SURFACE MOUNTED SOAP DISPENSER. "TECHNICAL CONCEPTS" 750127.
10. SHOWER ROD & CURTAIN ABOVE
11. WALL MOUNTED HAIR DRYER.
12. CUSTOM CERAMIC TILE FINISHED SHOWER W/ CUSTOM TRIANGULAR SOAP TRAY (2 TILES THICK) AND RAIN CLOUD SHOWER HEAD.
13. CUSTOM CERAMIC TILE FINISHED SHOWER W/ CUSTOM TRIANGULAR SOAP TRAY (2 TILES THICK), RECTANGULAR FOLDING SEAT, 24" HANDSHOWER W/ S/S ADA SLIDE BAR & 59" MIN. LENGTH HOSE & (2) ADA GRAB BARS; (1) 36" ALONG THE BACK WALL & (1) 30" ALONG THE WALL OPPOSITE THE SEAT.
14. WALL MOUNTED METAL TOWEL HOOK. AMERICAN SPECIALTIES INC. MODEL #7345 "DOUBLE ROBE HOOK". FINISH TO BE SATIN. TOP OF HOOK TO BE 48" MAX. A.F.F.
15. WALL MOUNTED FRAMED MIRROR
16. 6' LONG BENCH TO BE SUPPLIED BY TENANT & INSTALLED BY G.C. AFTER LOCKERS ARE INSTALLED.
17. SANITARY NAPKIN DISPOSAL. "GRAINGER" #1ECK9.
18. WALL MOUNTED VANITY W/ AUTOMATIC SENSOR. SEE PLUMBING DRAWINGS.
19. WALL-MOUNTED, HIGH-POWERED HAND DRYER. BOBRICK B-7128. MOUNT ENTIRELY ABOVE COUNTER SURFACE.
20. "GRAINGER" MODEL 1ECK2 TOUGH GUY STAINLESS STEEL TOILET SEAT COVER.
21. NOT USED
22. NOT USED
23. NEW INSTA HOT WATER HEATER PANELS. SEE PLUMBING DRAWINGS.
24. DUAL HEIGHT WATER FOUNTAIN W/ BOTTLE FILLER, SEE PLUMBING DRAWINGS.
25. IKEA 29" X 65" HEMNES MIRROR W/ BLACK-BROWN FRAME. 2
26. 4" TALL SHOWER CURB WITH SHOWER CURTAIN & ROD ABOVE. SEE DETAIL 6/A.7 FOR CURB DETAIL.
27. CUSTOM CERAMIC TILE FINISHED CHANGING ALCOVE
28. RAIN CLOUD SHOWER HEAD LOCATION AS MENTIONED IN (12)
29. LOCATION OF SHOWER CONTROLS
30. NOT USED.
31. TENANT SUPPLIED TV OVER LOCKERS
32. FLOOR MOUNTED ADA COMPLIANT BENCH

- **G.C. TO SUPPLY ALL ITEMS, EXCEPT #6, #7, #16 & #31**
- **G.C. TO MOUNT/INSTALL ALL ITEMS.**
- **ALL TOILET ROOM ACCESSORIES TO BE STAINLESS STEEL FINISHED.**

ADA COMPLIANT BENCH NOTE:

ALL BENCH SEAT SURFACES SHALL BE SLIP RESISTANT AND SHALL NOT ACCUMULATE WATER. ADA BENCH BY RSCLOCKERS.COM OR APPROVED EQUIVALENT. 42" LONG x 20" WIDE x 17.5" HIGH. COLORS TO BE BLACK OR WOOD FINISH. INSTALL FLOOR MOUNTED BENCH w/ BACK SUPPORT IN EACH LOCKER ROOM. ALL ADA BENCHES BY G.C.

LOCKER PLATFORM NOTE:

G.C. SHALL SUPPLY & INSTALL A NEW BUILT-UP PLATFORM BELOW ALL OWNER SUPPLIED & INSTALLED LOCKERS. SEE 4/A.7

LOCKER LEGEND:

- 12" WIDE, SINGLE-COMPARTMENT LOCKER
- 12" WIDE, DOUBLE-COMPARTMENT LOCKER
- 12" WIDE, QUADRUPLE-COMPARTMENT LOCKER

PROPOSED RENOVATION FOR:

PLANET FITNESS

19516 STATE ROUTE 410E
BONNEY LAKE, WASHINGTON 98391

MICHAEL J. PILKO, ARCHITECT
860 FIRST AVE, SUITE 9A
KING OF PRUSSIA, PA 19406
484-928-0650

10965 REGISTERED ARCHITECT
MICHAEL J. PILKO
STATE OF WASHINGTON

RHJ ASSOCIATES, P.C.
PROJECT MANAGEMENT
860 1ST AVE, SUITE 9A
KING OF PRUSSIA, PA 19406
610 337 4555
www.rhjassoc.com

DATE: 5/19/2017

REVISIONS	
2	TENANT CHANGES 8/08/2017

A.3

2017-0105

Y:\Planet Fitness_JEG Viper_Bonney Lake WA_CIRCA_2017-0105\Drawings\Rev #2\ED-A01-A0x.dwg

SYMBOLS LEGEND:

- NEW 2X4 GRID AND A.C.T. #1. SEE FINISH SELECTIONS.
- NEW 2X4 GRID AND A.C.T. #2. SEE FINISH SELECTIONS.
- NEW 2X2 GRID AND A.C.T. #3. SEE FINISH SELECTIONS.
- NEW 2X4 "SECOND LOOK II" GRID AND A.C.T. #4. SEE FINISH SELECTIONS.
- NEW RECESSED LED HIGH HAT SHOWER FIXTURE. SEE ELECTRICAL DRAWINGS.
- NEW LED TRACK LIGHTING W/ ADJUSTABLE HEADS. SEE ELECTRICAL DRAWINGS.
- NEW LED DOWNLIGHT FIXTURE. SEE ELECTRICAL DRAWINGS.
- NEW HIGH BAY LED LIGHT FIXTURE. LIGHT TO BE HUNG DIRECTLY FROM NEW UNI-STRUT SPANNING ALONG BOTTOM OF JOISTS. SEE ELECTRICAL DRAWINGS.
- EXISTING EXTERIOR WALL PACK. REBULB & CLEAN FIXTURE. RE-WIRE AS REQUIRED. SEE ELECTRICAL DRAWINGS.
- NEW WALL SCONCE. CENTER IN BETWEEN MIRRORS IN THE TOILET ROOMS. CENTER OF MOUNTING PLATE 84" A.F.F. SEE ELECTRICAL DRAWINGS.
- NEW 8' LONG LED TAPE LIGHT BUILT INTO NEW DECORATIVE MIRROR PROFILE. (1) FIXTURE ABOVE MIRROR & (1) FIXTURE BELOW MIRROR. SEE ARCHITECTURAL DETAIL 1/A.8 & ELECTRICAL DRAWINGS.
- NEW LED PENDANT LIGHT WITH WINGS. UNDERSIDE AT 8'-4" A.F.F. SEE ELECTRICAL DRAWINGS.
- NEW 4' (2) TUBE UTILITY LIGHT CHAIN HUNG FROM JOISTS. SEE ELECTRICAL DRAWINGS.
- NEW 2X2 LAY-IN SUPPLY AIR DIFFUSER. PAINT BLACK IN ALL A.C.T. #2 & A.C.T. #3 AREAS. SEE MECHANICAL DRAWINGS
- NEW 2X2 LAY-IN RETURN AIR GRILLE. PAINT BLACK IN ALL A.C.T. #2 & A.C.T. #3 AREAS. SEE MECHANICAL DRAWINGS
- NEW 2X4 LAY-IN RETURN AIR GRILLE. PAINT BLACK IN ALL A.C.T. #2 & A.C.T. #3 AREAS. SEE MECHANICAL DRAWINGS
- NEW EXHAUST FAN. SEE MECHANICAL DRAWINGS.
- NEW EXPOSED UP-RIGHT SPRINKLER HEAD. SEE FIRE PROTECTION DRAWING.
- NEW DROPPED PENDANT SPRINKLER HEAD. SEE FIRE PROTECTION DRAWING.
- NEW CONCENTRIC DIFFUSER BELOW R.T.U. DROP. MOUNT AS HIGH AS POSSIBLE DIRECTLY BELOW U.S. OF ROOF JOISTS. PAINT P-4. SEE MECHANICAL DRAWINGS. ALL T-STATS TO BE MOUNTED IN ROOM #111 AND ARE TO BE LABELED.
- NEW EXPOSED SPIRAL DUCT WORK. PAINT. SEE MECHANICAL DRAWINGS.
- NEW SIDE RETURN AIR GRILLE. PAINT TO MATCH WALL SURFACE IT IS MOUNTED TO. SEE MECHANICAL DRAWINGS
- NEW SIDE BLOWER DIFFUSER. PAINT TO MATCH EXPOSED PAINTED DUCT OR THE WALL SURFACE IT IS MOUNTED TO. SEE MECHANICAL DRAWINGS
- NEW OWNER SUPPLIED & INSTALLED SPEAKER. INSTALL SUPPORT BRACKETS AT ALL SPEAKER LOCATIONS WITHIN DROP CEILING AREAS. G.C. TO COORDINATE.

CONDUIT & PIPING PAINT NOTE:

G.C. SHALL PAINT ALL EXPOSED CONDUIT, PIPING, ETC. PAINT COLOR P-4 IN OPEN CEILING AREAS #102 & #134

BIGASSFAN CONNECTIONS TO FIRE ALARM PANEL NOTE:

INSTALL CONTACTORS AT ALL BIGASSFANS BACK TO FIRE ALARM PANEL, SO FAN SHUTS DOWN UPON ACTIVATION OF THE FIRE ALARM SYSTEM.

RADIO ZONE NOTE:

THE OWNER'S RADIO SPEAKER INSTALLER TO WIRE (13) ZONES FOR SEPARATE VOLUME LEVELS AT THE VOLUME CONTROL PANEL. ALL AREAS AND TANNING AND TONING BOOTHS/BEDS TO BE HARDWIRED TO VOLUME CONTROL PANEL. ZONES TO BE:

- STRETCHING AREA / 360 MACHINE AREA / 30 MINUTE WORKOUT AREA (ALL ON ONE ZONE)
- LOCKER ROOMS (BOTH ON SAME ZONE)
- OPEN WORKOUT AREA (ALL ON ONE ZONE)
- RELAXATION ZONE
- 5 TANNING BOOTHS/BEDS
- 3 TONING BOOTHS
- SPA LOUNGE

ROOF DECK INFILL NOTE:

G.C. SHALL INFILL ANY ROOF DECK OPENINGS TO MATCH & ALIGN W/ EXISTING WHERE FORMER EXHAUST FANS, FLUES, VENTS, HVAC UNITS, ETC. ARE BEING REMOVED BUT NOT REPLACED. SEE STRUCTURAL DRAWINGS FOR TYPICAL ROOF DECK INFILL DETAIL.

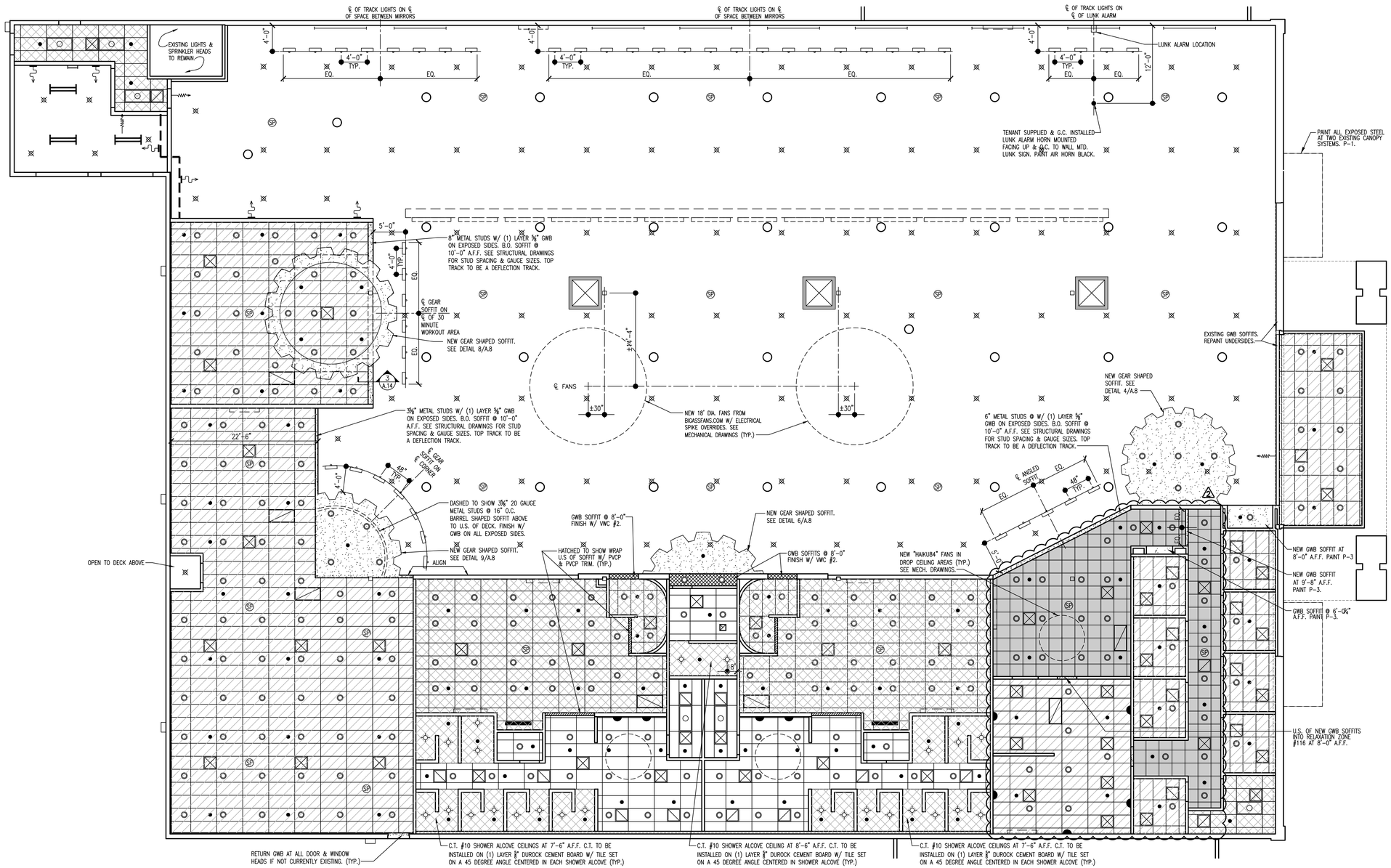

1 REFLECTED CEILING PLAN

SCALE: 1/8" = 1'-0"

PROPOSED RENOVATION FOR:

PLANET FITNESS

19516 STATE ROUTE 410E
BONNEY LAKE, WASHINGTON 98391

MICHAEL J. PILKO, ARCHITECT
860 FIRST AVE, SUITE 9A
KING OF PRUSSIA, PA 19406
484-928-0650

10965 REGISTERED ARCHITECT
MICHAEL J. PILKO
STATE OF WASHINGTON

RHJ ASSOCIATES, P.C.
PROJECT MANAGEMENT
860 1ST AVE SUITE 9A
KING OF PRUSSIA, PA 19406
610 337 4555
www.rhjassoc.com

DATE: 5/19/2017	
REVISIONS	
2	TENANT CHANGES 6/08/2017

A.4

2017-0105

X:\Planet Fitness_JEG Viper_Bonney Lake WA_CD&CA_2017-0105\Drawings\Rev #2\ED-A01-A04x.dwg

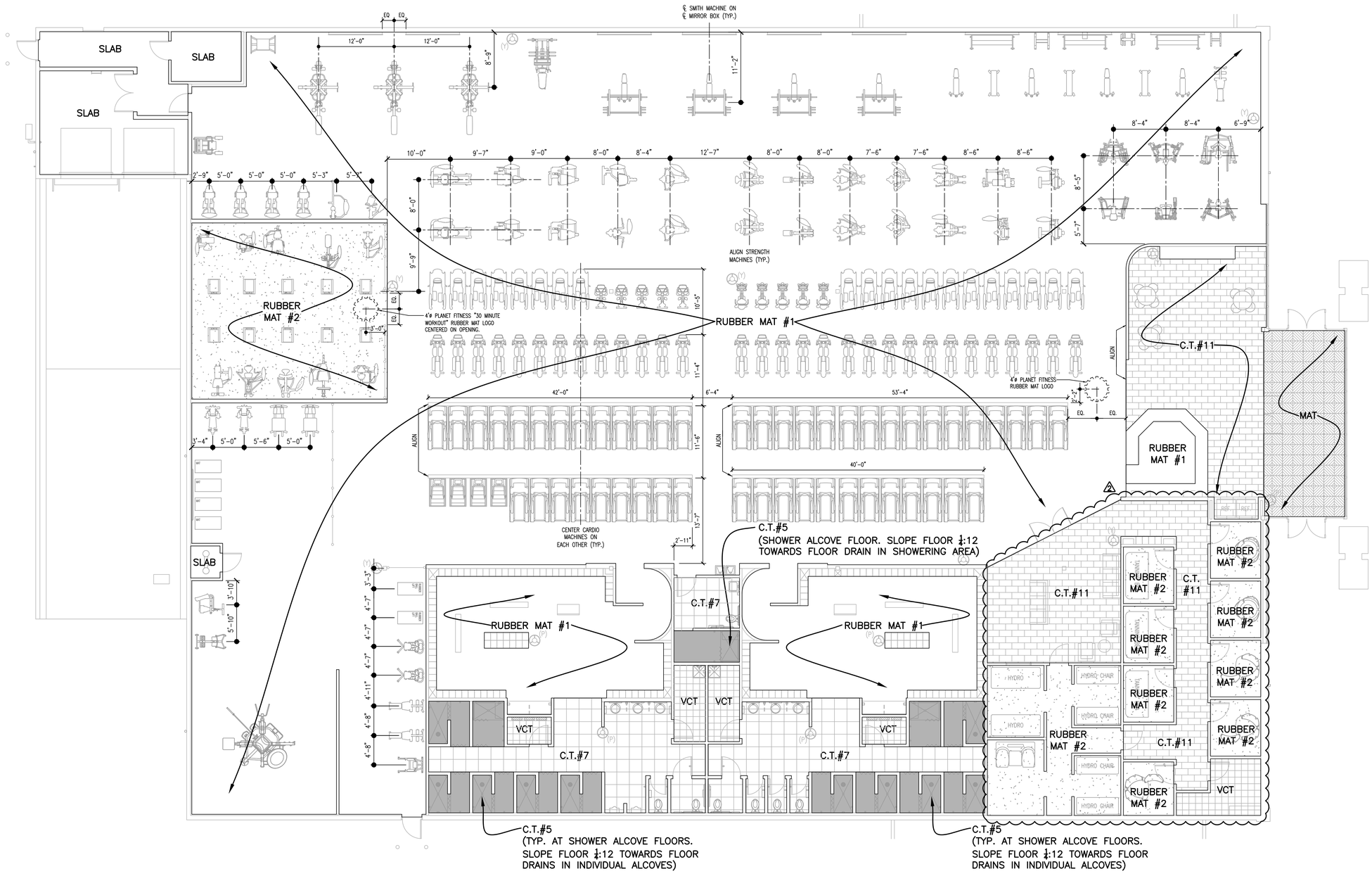

NOTE:

ALL RUBBER MAT FLOOR FINISHES, 4'-0" DIAMETER RUBBER MAT LOGOS AND RUBBER MAT FLOOR ADHESIVE TO BE SUPPLIED BY THE OWNER AND INSTALLED BY THE G.C.

NOTE:

G.C. TO MECHANICALLY CLEAN ALL RUBBER MAT FLOORING THROUGHOUT FITOUT PRIOR TO OWNER'S LOCKER'S, EXERCISE MACHINES & TANNING BOOTHS ARRIVING TO THE JOB SITE.

1 FLOOR FINISH & EQUIPMENT LOCATION PLAN

SCALE: 1/8"=1'-0"

PROPOSED RENOVATION FOR:

PLANET FITNESS

19516 STATE ROUTE 410E
BONNEY LAKE, WASHINGTON 98391

MICHAEL J. PILKO, ARCHITECT
860 FIRST AVE, SUITE 9A
KING OF PRUSSIA, PA 19406
484-928-0650

10965 REGISTERED ARCHITECT
MICHAEL J. PILKO
STATE OF WASHINGTON

RHJ ASSOCIATES, P.C.
PROJECT MANAGEMENT
860 1ST AVE SUITE 9A
KING OF PRUSSIA, PA 19406
610 337 4555
www.rhjassoc.com

DATE: 5/19/2017	
REVISIONS	
2	TENANT CHANGES 8/08/2017

A.5

2017-0105

H:\Planet Fitness_JEG Viper_Bonney Lake WA_CD&CA_2017-0105\Drawings\Rev #2\A05-FINISH.dwg

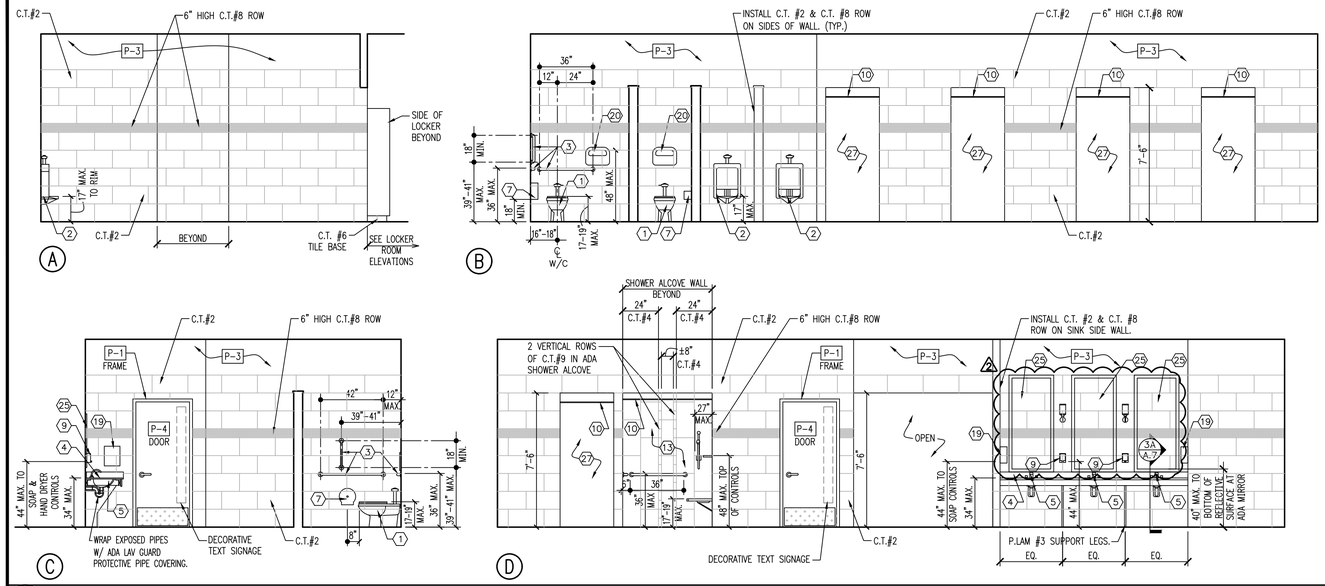

1 MEN'S TOILET & SHOWER ROOM ELEVATIONS

SCALE: 1/4" = 1'-0"

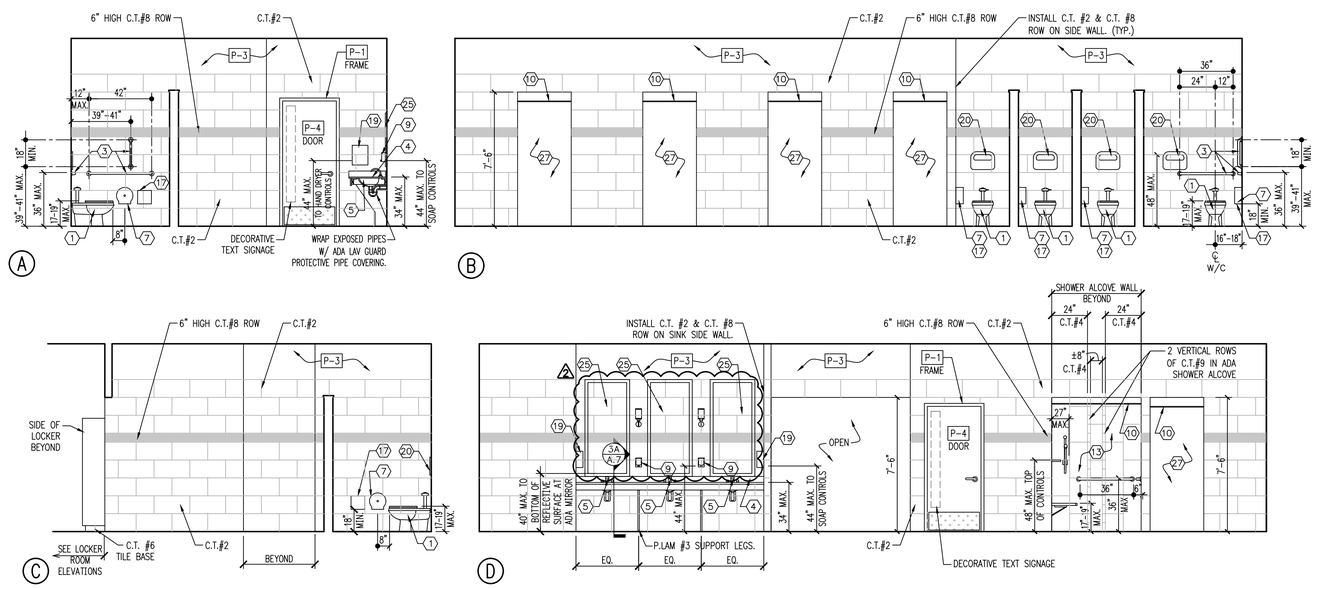

2 WOMEN'S TOILET & SHOWER ROOM ELEVATIONS

SCALE: 1/4" = 1'-0"

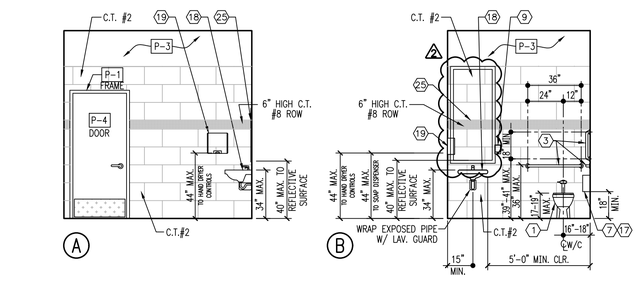

3 UNISEX TOILET & SHOWER ROOM ELEVATIONS

SCALE: 1/4" = 1'-0"

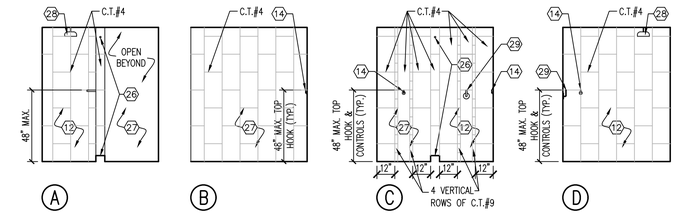

4 TYPICAL SHOWER STALL ELEVATIONS

SCALE: 1/4" = 1'-0"

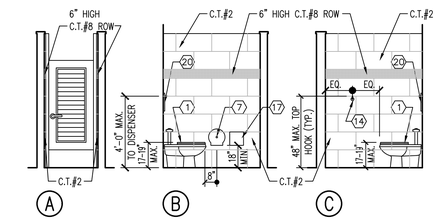

5 TYPICAL TOILET STALL ELEVATIONS

SCALE: 1/4" = 1'-0"

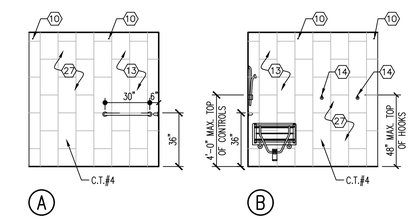

6 TYPICAL ADA SHOWER ELEVATIONS

SCALE: 1/4" = 1'-0"

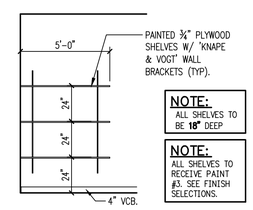

NOTE: ALL SHELVES TO BE **18"** DEEP

NOTE: ALL SHELVES TO RECEIVE PAINT #3. SEE FINISH SELECTIONS.

7 UTILITY ROOM SHELVING

SCALE: 1/4" = 1'-0"

SYMBOLS LEGEND:

1. FLOOR MOUNTED WATER CLOSET W/ AUTOMATIC & MANUAL OVERRIDE FLUSH VALVE. SEE PLUMBING DRAWINGS.
2. WALL MOUNTED URINAL W/ AUTOMATIC & MANUAL OVERRIDE FLUSH VALVE. SEE PLUMBING DRAWINGS.
3. (1) 36", (1) 42" & (1) 18" ADA GRAB BARS BY "GRAINGER".
4. ONE PIECE GRANITE #2 COUNTER TOP W/ GRANITE #2 BACK & SIDE SPLASHES & GRANITE #2 APRON. SUPPORT LEGS TO BE P.LAM. #3.
5. UNDERMOUNTED VANITY BOWL & FAUCET W/ AUTOMATIC SENSOR. SEE PLUMBING DRAWINGS.
6. 6'H LOCKERS TO BE SUPPLIED & INSTALLED BY TENANT
7. JUMBO TOILET PAPER DISPENSER BY TENANT.
8. FLOOR MOUNTED MOP SINK. SEE PLUMBING DRAWINGS.
9. AUTOMATIC SURFACE MOUNTED SOAP DISPENSER. "TECHNICAL CONCEPTS" 750127.
10. SHOWER ROD & CURTAIN ABOVE
11. WALL MOUNTED HAIR DRYER.
12. CUSTOM CERAMIC TILE FINISHED SHOWER W/ CUSTOM TRIANGULAR SOAP TRAY (2 TILES THICK) AND RAIN CLOUD SHOWER HEAD.
13. CUSTOM CERAMIC TILE FINISHED SHOWER W/ CUSTOM TRIANGULAR SOAP TRAY (2 TILES THICK), RECTANGULAR FOLDING SEAT, 24" HANDSHOWER W/ S/S ADA SLIDE BAR & 59" MIN. LENGTH HOSE & (2) ADA GRAB BARS; (1) 36" ALONG THE BACK WALL & (1) 30" ALONG THE WALL OPPOSITE THE SEAT.
14. WALL MOUNTED METAL TOWEL HOOK. AMERICAN SPECIALTIES INC. MODEL #7345 "DOUBLE ROBE HOOK". FINISH TO BE SATIN. TOP OF HOOK TO BE 48" MAX. A.F.F.
15. WALL MOUNTED FRAMED MIRROR
16. 6' LONG BENCH TO BE SUPPLIED BY TENANT & INSTALLED BY G.C. AFTER LOCKERS ARE INSTALLED.
17. SANITARY NAPKIN DISPOSAL. "GRAINGER" #1ECK9.
18. WALL MOUNTED VANITY W/ AUTOMATIC SENSOR. SEE PLUMBING DRAWINGS.
19. WALL-MOUNTED, HIGH-POWERED HAND DRYER. BOBRICK B-7128. MOUNT ENTIRELY ABOVE COUNTER SURFACE.
20. "GRAINGER" MODEL 1ECK2 TOUGH GUY STAINLESS STEEL TOILET SEAT COVER.
21. NOT USED
22. NOT USED
23. NEW INSTA HOT WATER HEATER PANELS. SEE PLUMBING DRAWINGS.
24. DUAL HEIGHT WATER FOUNTAIN W/ BOTTLE FILLER, SEE PLUMBING DRAWINGS.
25. IKEA 29" X 65" HEMNES MIRROR W/ BLACK-BROWN FRAME. 2
26. 4" TALL SHOWER CURB WITH SHOWER CURTAIN & ROD ABOVE. SEE DETAIL 6/A.7 FOR CURB DETAIL.
27. CUSTOM CERAMIC TILE FINISHED CHANGING ALCOVE
28. RAIN CLOUD SHOWER HEAD LOCATION AS MENTIONED IN 12
29. LOCATION OF SHOWER CONTROLS
30. NOT USED.
31. TENANT SUPPLIED TV OVER LOCKERS
32. FLOOR MOUNTED ADA COMPLIANT BENCH

- **G.C. TO SUPPLY ALL ITEMS, EXCEPT #6, #7, #16 & #31**
- **G.C. TO MOUNT/INSTALL ALL ITEMS.**
- **ALL TOILET ROOM ACCESSORIES TO BE STAINLESS STEEL FINISHED.**

NOTE: ALL COUNTERS TO BE ADA ACCESSIBLE VIA A FORWARD APPROACH.

NOTE: WRAP ALL EXPOSED SINK PIPING W/ LAV. GUARD PROTECTIVE PIPE COVERING.

PROPOSED RENOVATION FOR:

PLANET FITNESS

19516 STATE ROUTE 410E
BONNEY LAKE, WASHINGTON 98391

MICHAEL J. PILKO, ARCHITECT
860 FIRST AVE, SUITE 9A
KING OF PRUSSIA, PA 19406
484-928-0650

10065 REGISTERED ARCHITECT
MICHAEL J. PILKO
STATE OF WASHINGTON

RHJ ASSOCIATES, P.C.
PROJECT MANAGEMENT
860 1ST AVE, SUITE 9A
KING OF PRUSSIA, PA 19406
610.337.4555
www.rhjassoc.com

DATE: 5/19/2017
REVISIONS
2 TENANT CHANGES 8/08/2017

A.6

2017-0105

Y:\Planet Fitness_JCG Viper_Bonney Lake WA_CDA\CA_2017-0105\Drawings\Rev #2\Axx-Axx TR & LKR & GYM ELEV.dwg

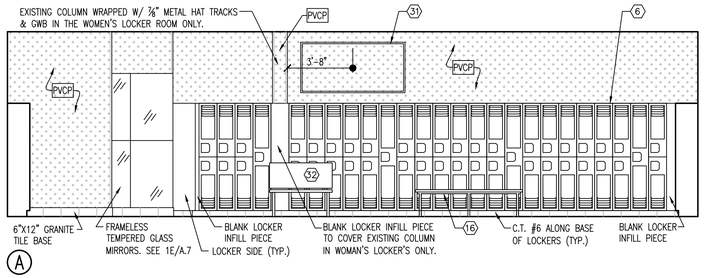

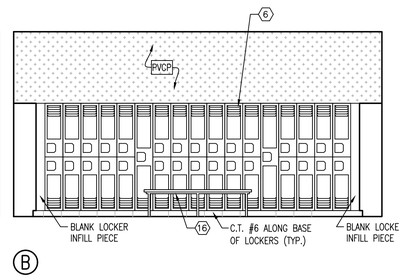

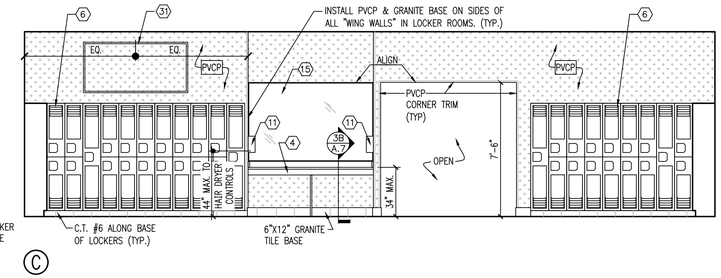

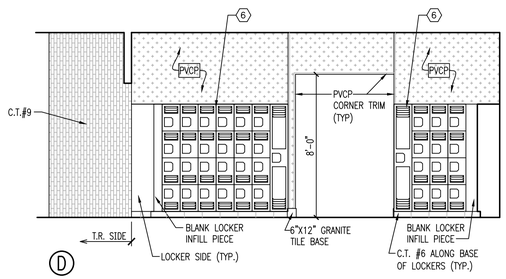

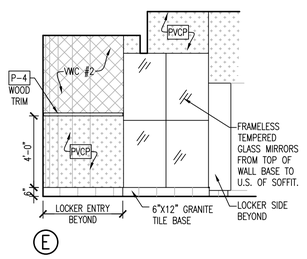

SYMBOLS LEGEND:

- (4) GRANITE #2 COUNTER TOP W/ GRANITE #2 BACK & SIDE SPLASHES & GRANITE #2 APRON. SUPPORT LEGS TO BE P.LAM. #3.
- (6) 6'H LOCKERS TO BE SUPPLIED & INSTALLED BY TENANT
- (8) FLOOR MOUNTED MOP SINK. SEE PLUMBING DRAWINGS.
- (11) WALL MOUNTED HAIR DRYER.
- (15) WALL MOUNTED FRAMED MIRROR
- (16) 6' LONG BENCH TO BE SUPPLIED BY TENANT & INSTALLED BY G.C. AFTER LOCKERS ARE INSTALLED.
- (31) TENANT SUPPLIED TV OVER LOCKERS
- (32) FLOOR MOUNTED ADA COMPLIANT BENCH

– G.C. TO SUPPLY ALL ITEMS, EXCEPT #6, #7, #16 & #31
– G.C. TO MOUNT/INSTALL ALL ITEMS.
– ALL TOILET ROOM ACCESSORIES TO BE STAINLESS STEEL FINISHED.

ADA COMPLIANT BENCH NOTE:

ALL BENCH SEAT SURFACES SHALL BE SLIP RESISTANT AND SHALL NOT ACCUMULATE WATER. ADA BENCH BY RSCLOCKERS.COM OR APPROVED EQUIVALENT. 42" LONG x 20" WIDE x 17.5" HIGH. COLORS TO BE BLACK OR WOOD FINISH. INSTALL FLOOR MOUNTED BENCH w/ BACK SUPPORT IN EACH LOCKER ROOM. ALL ADA BENCHES BY G.C.

NOTE:

PVCP = PVC PANEL

NEW BENCH CONNECTION NOTE:

ALL BENCHES TO BE BOLTED TO FLOOR AFTER LOCKERS ARE INSTALLED. G.C. TO TRIM BOLTS AFTER CONNECTION.

LOCKER PLATFORM NOTE:

G.C. SHALL SUPPLY AND INSTALL A NEW BUILT-UP PLATFORM BELOW ALL OWNER SUPPLIED AND INSTALLED LOCKERS. SEE DETAIL 4/A.7.

LOCKER ROOMS WALL BASE NOTE:

C.T. #6 TO BE INSTALLED BELOW & ALONG EXPOSED BASE SIDES OF ALL LOCKER PLATFORMS. 6"X12" GRANITE TILE BASE TO BE INSTALLED ALONG ALL WALL AREAS.

NOTE:

ALL COUNTERS TO BE ADA ACCESSIBLE VIA A FORWARD APPROACH.

1 TYPICAL LOCKER ROOM ELEVATIONS

SCALE: 1/4" = 1'-0"

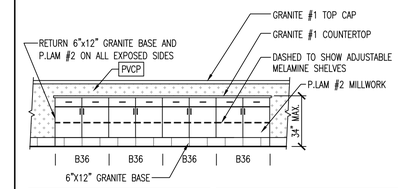

ACCESSIBILITY NOTE:

- COUNTER TO BE ADA ACCESSIBLE VIA A PARALLEL APPROACH.

COUNTER DEPTH NOTE:

- COUNTER TO BE 25½" DEEP. BASE CABINETS TO BE 24" DEEP.

LOCK NOTE:

- G.C. TO PROVIDE LOCKS ON ALL BASE CABINET DOORS.

SCALE: 1/4" = 1'-0"

2 MILLWORK ELEVATION

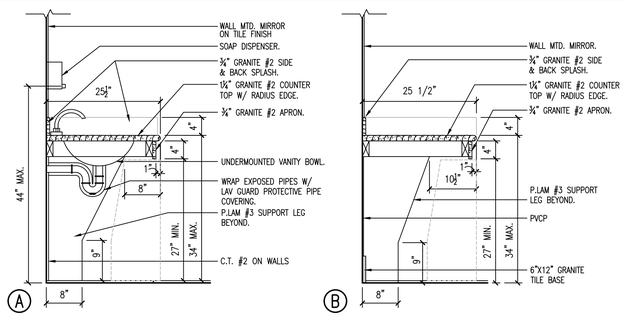

NOTE:

ALL COUNTERS TO BE ADA ACCESSIBLE VIA A FORWARD APPROACH.

SCALE: 3/4" = 1'-0"

3 TOILET ROOM & LOCKER ROOM COUNTER DETAIL

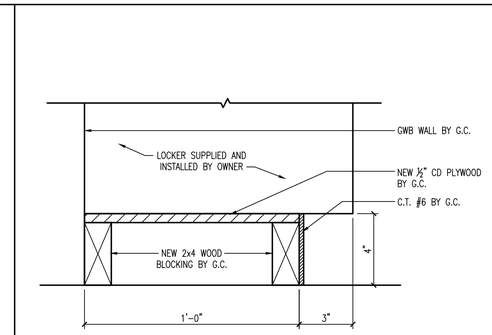

SCALE: 3" = 1'-0"

4 LOCKER BASE PLATFORM DETAIL

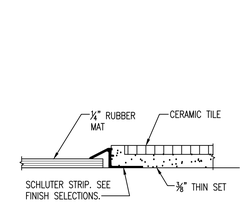

HALF SCALE

5 REDUCING STRIP DETAIL

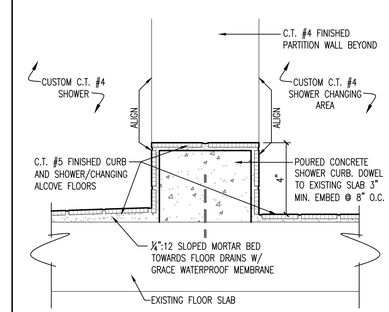

SCALE: 3" = 1'-0"

6 SHOWER CURB DETAIL

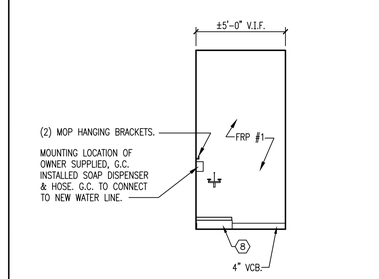

SCALE: 1/4" = 1'-0"

7 MOP SINK ELEVATION

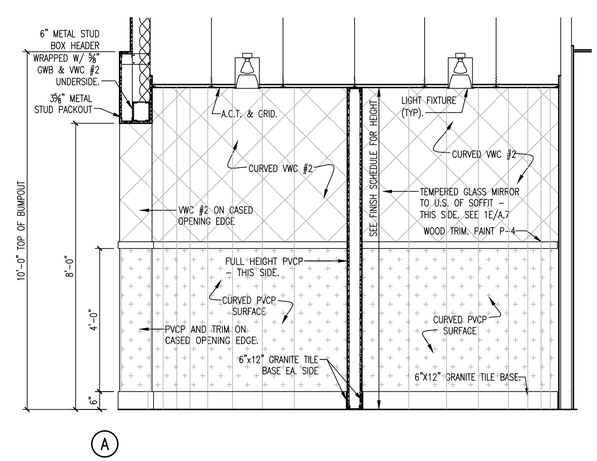

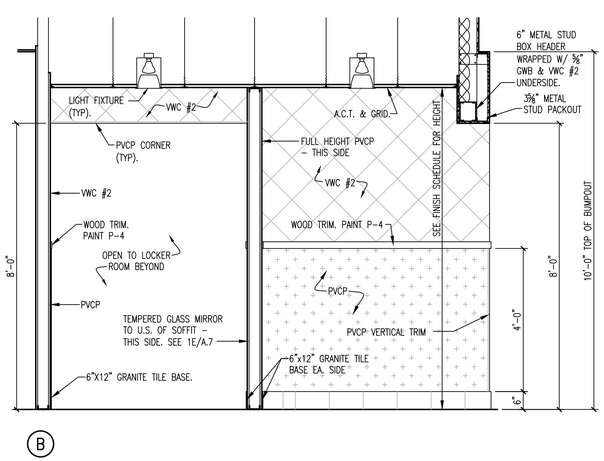

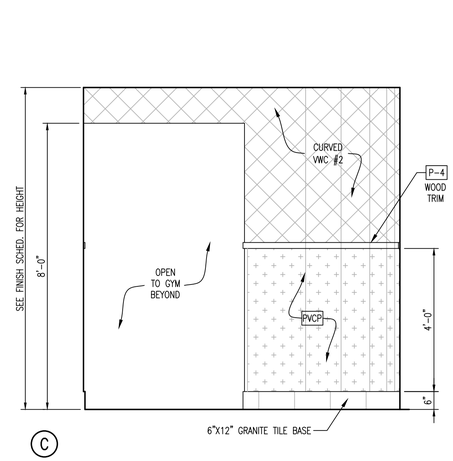

SCALE: 1/2" = 1'-0"

8 LOCKER ROOM ENTRANCE ELEVATIONS

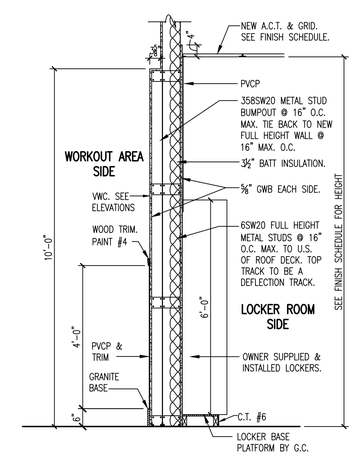

SCALE: 1/2" = 1'-0"

9 PARTITION WALL SECTION

PROPOSED RENOVATION FOR:

PLANET FITNESS

19516 STATE ROUTE 410E
BONNEY LAKE, WASHINGTON 98391

MICHAEL J. PILKO, ARCHITECT
860 FIRST AVE, SUITE 9A
KING OF PRUSSIA, PA 19406
484-928-0650

10065 REGISTERED ARCHITECT
MICHAEL J. PILKO
STATE OF WASHINGTON

RHJ ASSOCIATES, P.C.
PROJECT MANAGEMENT
860 1ST AVE, SUITE 9A
KING OF PRUSSIA, PA 19406
610 337 4555
www.rhjassoc.com

DATE: 5/19/2017
REVISIONS

A.7

2017–0105

Y:\Planet Fitness_JEG Viper_Bonney Lake WA_CD&CA_2017-0105\Drawings\Rev #2\Axx-Axx TR & LKR & GYM ELEV.dwg

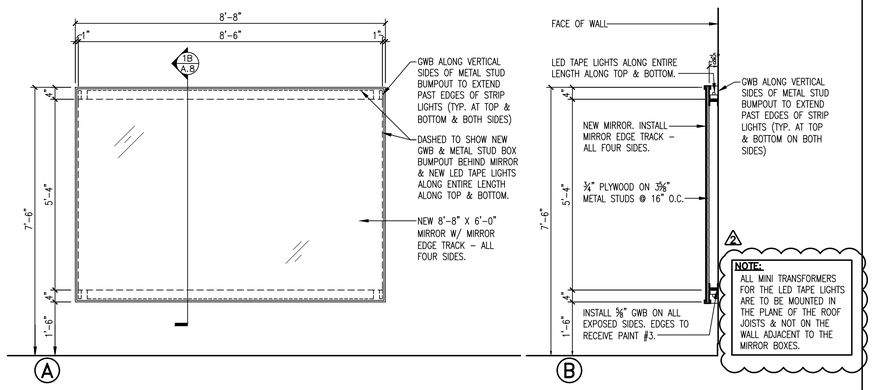

1 MIRROR BOX DETAILS

SCALE: 1/2" = 1'-0"

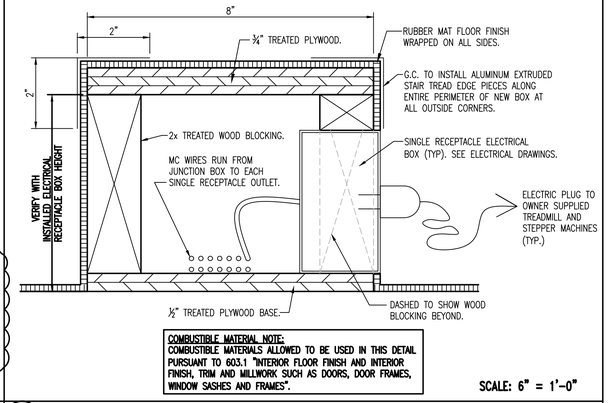

2 TREADMILL RECEPTACLE CURB DETAIL

SCALE: 6" = 1'-0"

PLANET FITNESS NEW CLUB NETWORK CABLING

SPECIFICATIONS:

1. LOCATE ROOM FOR NETWORK EQUIPMENT CABINET. TYPICALLY A UTILITY ROOM WHERE THE PHONE LINES AND CABLE COME. ROOM SHOULD BE AROUND 5'x8'.
2. DMARC FOR PHONE/CABLE SHOULD BE EXTENDED TO THE UTILITY ROOM WHERE THE NETWORK CABINET IS LOCATED.
3. INSTALL ON FIRE–RATED PLYWOOD BACKBOARD IN UTILITY ROOM.
4. PROVIDE AND INSTALL ONE (1) 24"/12U SAFETY EDGE WALL MOUNTED RACK, 19" EIA 10–32 TAPPED RAILS W/ LOCKING DOORS.
5. PROVIDE AND INSTALL ONE (1) DATA SHELF WITHIN DATA CABINET TO ACCOMMODATE NETWORK DEVICES THAT ARE NOT RACK–MOUNTED.
6. PROVIDE AND INSTALL ONE (1) RACK MOUNT 24 PORT PATCH PANEL WITHIN DATA CABINET.
7. INSTALL ONE (1) CAT6 DATA DROP TO EACH OF THE FOLLOWING DEVICES. HEAD END OF THE CABLE SHOULD BE TERMINATED AT THE PATCH PANEL. FLOOR END TO BE TERMINATED IN A FLUSH MOUNT OR SURFACE MOUNT DATA BOX TO A CAT6 DATA JACK. CABLE WILL BE RUN TO EIA/TIA COMPLIANT STANDARDS ENSURING SERVICE LOOPS AND SUPPORT SPECIFICATIONS ARE MET. BOTH ENDS OF EACH CABLE WILL BE TERMINATED 568B AND TESTED WITH A CABLE TESTER FOR ATTENUATION AND CONTINUITY.

   A. DEVICES:
   - VISIONARY TERMINALS (AT LEAST 2, NOT MORE THAN 3)
   - MANAGER COMPUTER
   - PRINTER
   - TIME CLOCK
   - MUSIC SYSTEM/CLUBCOM
   - HYDRO MASSAGE BEDS
   - OTHER DEVICES AS NEEDED

8. INSTALL 6' CAT6 PATCH CORDS AT ALL DEVICES AND 2' CAT6 PATCH CORDS FROM PATCH PANEL TO BE CONNECTED TO NETWORK EQUIPMENT.

REQUIREMENT:

- EACH CABLE RUN MUST BE KEPT TO A MAXIMUM OF 295 FEET (90 METERS), SO THAT WITH PATCH CORDS, THE ENTIRE CHANNEL IS NO MORE THAN 328 FEET (100 METERS). THIS IS A REQUIREMENT OF THE STANDARD.
- MAINTAIN THE TWISTS OF THE PAIRS AS CLOSE AS POSSIBLE TO THE POINT OF TERMINATION, OR NO MORE THAN 0.5" (ONE HALF INCH) UNTWISTED.
- MAKE ONLY GRADUAL BENDS IN THE CABLE WHERE NECESSARY TO MAINTAIN THE MINIMUM BEND RADIUS OF 4 TIMES THE CABLE DIAMETER OR APPROXIMATELY 1" RADIUS (ABOUT THE ROUNDNESS OF A HALF–DOLLAR).
- DRESS THE CABLES NEATLY WITH CABLE TIES, USING LOW TO MODERATE PRESSURE.
- CROSS–CONNECT CABLES (WHERE NECESSARY), USING APPROPRIATELY RATED PUNCH BLOCKS AND COMPONENTS.
- USE LOW TO MODERATE FORCE WHEN PULLING CABLE. THE STANDARD CALLS FOR A MAXIMUM OF 25 LBF (POUNDS OF FORCE).
- USE CABLES PULLING LUBRICANT FOR CABLE RUNS THAT MAY OTHERWISE REQUIRE GREAT FORCE TO INSTALL.
- KEEP CABLES AS FAR AWAY FROM POTENTIAL SOURCES OF EMI (ELECTRICAL CABLES, TRANSFORMERS, LIGHT FIXTURES, ETC.) AS POSSIBLE. CABLES SHOULD MAINTAIN A 12–INCH SEPARATION FROM POWER CABLES.
- INSTALL PROPER CABLE SUPPORTS, SPACED NO MORE THAN 5 FEET APART.
- ALWAYS LABEL EVERY TERMINATION POINT AT BOTH ENDS. USE A UNIQUE NUMBER FOR EACH NETWORK LINK. THIS WILL MAKE MOVES, ADDS, CHANGES, AND TROUBLESHOOTING AS SIMPLE AS POSSIBLE. THE TIA–606A ADMINISTRATION STANDARD PROVIDES GUIDANCE FOR PROPERLY LABELING AN INSTALLATION.
- ALWAYS TEST EVERY INSTALLED SEGMENT WITH A CABLE TESTER. "TONING" ALONE IS NOT AN ACCEPTABLE TEST.
- ALWAYS INSTALL JACKS IN SUCH A WAY AS TO PREVENT DUST AND OTHER CONTAMINANTS FROM SETTLING ON THE CONTACTS. THE CONTACTS (PINS) OF THE JACK SHOULD FACE UP ON FLUSH MOUNTED PLATES, OR LEFT, RIGHT, OR DOWN (NEVER UP) ON SURFACE MOUNT BOXES.
- ALWAYS LEAVE EXTRA SLACK NEATLY COILED UP IN THE CEILING OR NEAREST CONCEALED PLACE. IT IS RECOMMENDED THAT YOU LEAVE AT LEAST 5 FEET OF SLACK AT THE WORK OUTLET END, AND 10 FEET OF SLACK AT THE PATCH PANEL END.
- ALWAYS USE GROMMETS TO PROTECT CABLE WHEN PASSING THROUGH METAL STUDS OR ANYTHING THAT CAN POSSIBLE CAUSE DAMAGE.
- CHOOSE EITHER 568A OR 568B WIRING SCHEME BEFORE YOU BEGIN YOUR PROJECT. WIRE ALL JACKS AND PATCH PANELS FOR THE SAME WIRING SCHEME (A OR B).
- OBEY ALL LOCAL AND NATIONAL FIRE AND BUILDING CODES. BE SURE TO FIRESTOP ALL CABLES THAT PENETRATE A FIREWALL. USE PLENUM RATED CABLE WHERE IT IS MANDATED.
- DO NOT – SPLICE OR BRIDGE CABLE AT ANY POINT. THERE SHOULD NEVER BE MULTIPLE APPEARANCES OF CABLE.
- DO NOT – INSTALL CABLE THAT IS SUPPORTED BY THE CEILING TILES.
- DO NOT – SKIN OFF MORE THAN 1" OF JACKET WHEN TERMINATING THE CABLING.
- DO NOT – USE EXCESSIVE FORCE WHEN PULLING CABLE.
- DO NOT – OVER TIGHTEN CABLE TIES OR USE PLASTIC TIES.
- DO NOT – USE OIL OR ANY OTHER LUBRICANT NOT SPECIFICALLY DESIGNED FOR NETWORK CABLE PULLING AS THEY CAN INFILTRATE THE CABLE JACKET, CAUSING DAMAGE TO THE INSULATION.
- NEVER INSTALL CABLE TAUGHT. A GOOD INSTALLATION SHOULD HAVE CABLES LOOSE, BUT NEVER SAGGING.
- DO NOT – ALLOW THE CABLE TO BE SHARPLY BENT, TWISTED, OR KINKED AT ANY TIME. THIS CAN CAUSE PERMANENT DAMAGE TO THE GEOMETRY OF THE CABLE AND CAUSE TRANSMISSION FAILURES.
- DO NOT – TIE CABLES TO ELECTRICAL CONDUITS, OR LAY CABLES ON ELECTRICAL FIXTURES.
- DO NOT – MIX 568A AND 568B WIRING ON THE SAME INSTALLATION.

RECOMMENDED VENDORS:

- JAMES NAVARRA: 562–900–8888
- PRS: FINN@PRSOL.COM OR 312–546–5252 X205

3 CLUB NETWORK CABLING NOTES

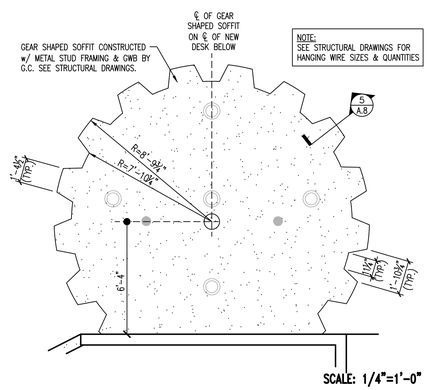

4 RECEPTION SOFFIT DETAIL

SCALE: 1/4"=1'-0"

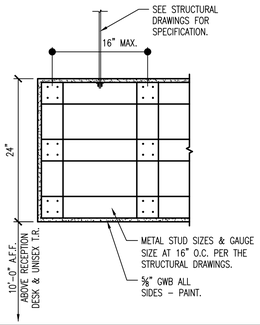

5 "GEAR" SOFFIT DETAIL

SCALE: 1"=1'-0"

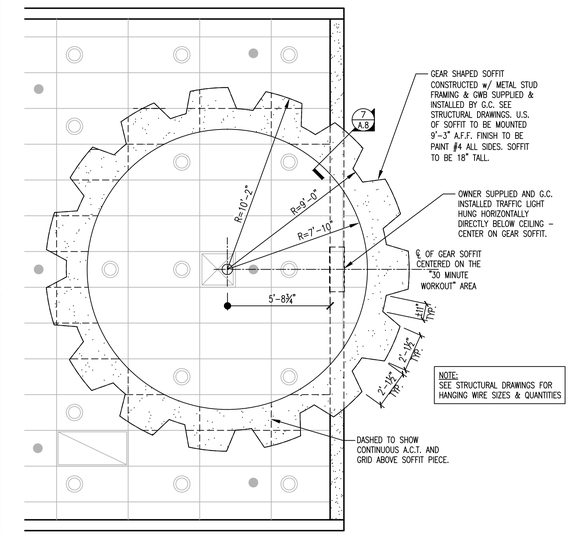

8 30 MINUTE WORKOUT SOFFIT DETAIL

SCALE: 1/4"=1'-0"

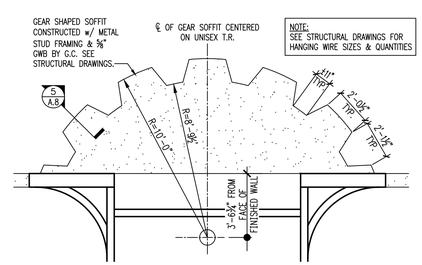

6 UNISEX T.R. SOFFIT DETAIL

SCALE: 1/4"=1'-0"

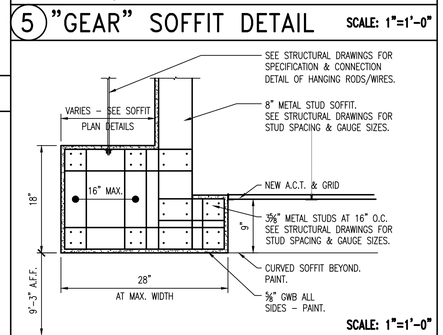

7 30 MIN. WORKOUT SOFFIT DETAIL

SCALE: 1"=1'-0"

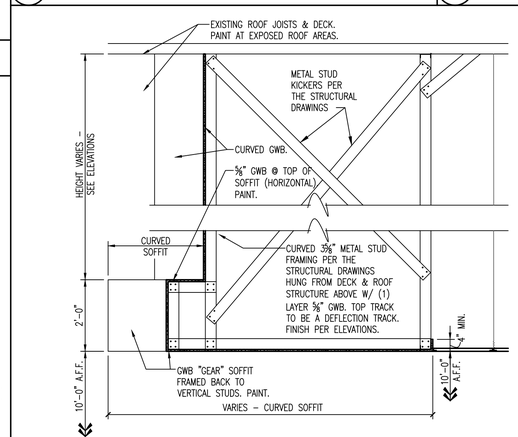

10 BARREL SOFFIT SECTION

SCALE: 1/2"=1'-0"

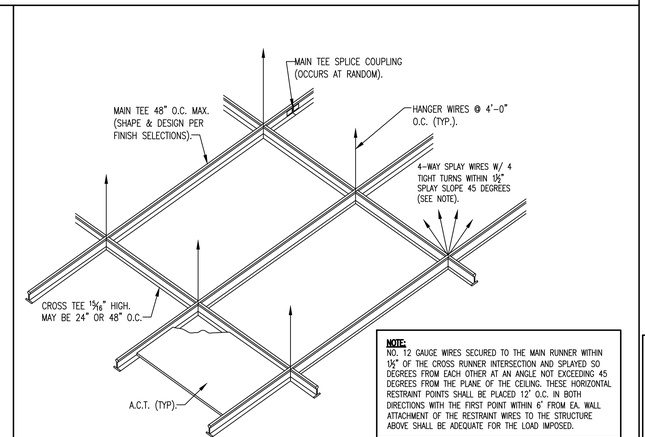

11 TYPICAL DROP CEILING DETAIL

NOT TO SCALE

12 FINISH SELECTIONS

FINISH SELECTIONS:

GRANITE TILE WALL BASE – 6"X12" ABSOLUTE BLACK (ALL EXPOSED EDGES TO BE POLISHED)

GRANITE #1 – 1¼" THICK IMPALA BLACK (ALL EXPOSED EDGES TO BE POLISHED)

GRANITE #2 – 1¼" THICK QUARTZ SILESTONE ALPINE WHITE (ALL EXPOSED EDGES TO BE POLISHED)

P.LAM –
- P.LAM. #1: NOT USED
- P.LAM. #2: WILSONART LAMINATE 1595–60 BLACK
- P.LAM. #3: WILSONART LAMINATE 4622–60 GREY NEBULA MATTE FINISH

MELAMINE – BLACK

VCB – 4" HIGH ROPPE 100 BLACK OR JOHNSONITE #40 BLACK

FRP (INCLUDE ALL NECESSARY TRIM PIECES) –
- FRP #1 – MARLITE WHITE PEBBLE FINISHED P100. THICKNESS .090"
- FRP #2 – IMPACT SPECIALTIES (FORMERLY GRAND ENTRANCE) 4'x8' IMAGITECT WALL COVERING WITH SILVER SPROCKETS & LOGOS, MATCHING TRIMS, ADHESIVE AND PRIMER. 888–424–6287

CEILING GRID & A.C.T. –
- GRID & A.C.T. #1: ARMSTRONG 2x4 VINYL FACED GYPSUM LAY–IN TILE IN 15/16 GRID. GRID & TILE COLORS TO BE WHITE.
- GRID & A.C.T. #2: ARMSTRONG 2X4 CORTEGA SQUARE LAY–IN TILES IN 15/16 GRID. GRID & TILE COLORS TO BE TECH BLACK #769 (BL).
- GRID & A.C.T. #3: NORTHEAST COLOR PF9950 24"X24" WOOD GRAIN CEILING TILES IN BLACK SQUARE GRID. 603–766–3722
- GRID & A.C.T. #4: ARMSTRONG 2X4 CORTEGA "SECOND LOOK II" ANGLED TEGULAR LAY–IN TILES IN 15/16 GRID. GRID & TILE COLORS TO BE WHITE.

WOOD DOOR HARDWARE –
LEVERSETS – SCHLAGE D–SERIES
HINGES – STANLEY
DOOR STOPS & MISC.. – HAGER
ALL HARDWARE FINISHES TO BE US26D

H.M. DOOR HARDWARE –
LEVERSETS – SCHLAGE D–SERIES
CYLINDER LOCK – SCHLAGE
HINGES – STANLEY
CLOSERS – LCN 4410 SERIES
PANIC DEVICES – VON DUPRIN 98 SERIES – EXPOSED VERTICAL RODS
DOOR STOPS & MISC. – HAGER
ALL HARDWARE FINISHES TO BE US26D

PAINT –
- PAINT #1: SHERWIN WILLIAMS "PURPLE PLANET FITNESS" Y38T154 – SATIN ULTRA DEEP BASE
- PAINT #2: SHERWIN WILLIAMS "YELLOW PLANET FITNESS" 738Y154 – SATIN VIVID YELLOW
- PAINT #3: SHERWIN WILLIAMS DOVER WHITE – NUMBER SW6385 FLAT LATEX
- PAINT #4: SHERWIN WILLIAMS TRICORN BLACK – NUMBER SW6258 FLAT LATEX
- PAINT #5: SHERWIN WILLIAMS SW7073 NETWORK GRAY SEMI–GLOSS FINISH
- PAINT #6: SHERWIN WILLIAMS SW6867 FIREWORKS EGGSHELL

INTERIOR COATING NOTE:
ALL INTERIOR PAINTED SURFACES TO RECEIVE (1) COAT GRAY PRIMER & (2) COATS FINISH COLOR EXCEPT THE EXPOSED ROOF DECK & ROOF STRUCTURE WHICH ARE TO RECEIVE (1) COAT DRYFALL PAINT. EXTERIOR METAL SURFACES ARE TO RECEIVE (1) COAT SHERWIN WILLIAMS PRO–CRYL UNIVERSAL PRIMER, (3) COATS OF THE SPECIFIED COLOR IN SHER–CRYL HPA HIGH PERFORMANCE ACRYLIC AND (1) FINISH COAT OF SHER–CLEAR 1K ACRYLIC CLEAR, SEMI–GLOSS B66C380.

CERAMIC TILE –
- C.T. #1: CREATIVE MATERIALS BLISS LINEAR MOSAIC WATERFALL 12"x12" W/ FUSION PRO GROUT #335 WINTER GREY.
- C.T. #2: MARAZZI: LIFESTYLES GRAY 12"x24" RAGR26P (INSTALLED HORIZONTALLY) W/ FUSION PRO GROUT #335 WINTER GREY.
- C.T. #3: NOT USED.
- C.T. #4: MARAZZI: LIFESTYLES GRAY 12"x24" RAGR26P (INSTALLED VERTICALLY) W/ FUSION PRO GROUT #335 WINTER GREY.
- C.T. #5: MARAZZI: LIFESTYLES ANTHRACITE 2"x4" RAGR26G W/ FUSION PRO GROUT #335 WINTER GREY.
- C.T. #6: MARAZZI: BASIC BLACK 12"x12" W/ FUSION PRO GROUT #60 CHARCOAL **G.C. TO FIELD CUT INTO 4"X12" TILES FOR INSTALLATION ALONG BASE OF ALL LOCKERS.**
- C.T. #7: MARAZZI: LIFESTYLES ANTHRACITE 24"x24" RAGR26G W/ FUSION PRO GROUT #335 WINTER GREY.
- C.T. #8: MARAZZI: 999–825 1"x1" PLANET FITNESS BLEND W/ FUSION PRO GROUT #335 WINTER GREY.
- C.T. #9: MARAZZI: 827 2"x6" PLANET FITNESS BLEND W/ FUSION PRO GROUT #335 WINTER GREY.
- C.T. #10: MARAZZI: LIFESTYLES GRAY 12"x12" RAGR26P W/ #335 WINTER GREY FUSION PRO GROUT.
- C.T. #11: CREATIVE MATERIALS ATMOSPHERE NIGHT SKY 12"X24" W/ FUSION PRO GROUT #335 WINTER GREY.

NOTE: PROVIDE BLACK SCHLUTER STRIPS AT ALL FLOOR FINISH TRANSITIONS BETWEEN C.T. & ADJACENT RUBBER MAT. SCHLUTER STRIPS TO BE RENO–TK & RENO–U PROFILES IN BRIGHT BLACK ANODIZED ALUMINUM IF AVAILABLE OR TUSCAN BRONZE COLOR COATED ALUMINUM IF BLACK IS NOT AVAILABLE.

V.C.T. – ARMSTRONG STANDARD EXCELON 12"x12" 51904 STERLING

SHOWER CURTAIN – ERWYN DIAMOND 48x72 BAYBERRY
CONTACT ED @ 1–732–972–1440 x231
(G.C. TO ORDER 24 TOTAL)

PVC PANELS (PVCP) – MARLITE 4'X8' VOLTA FLEX "CROSSHATCH SILVER SQUARE 5" PANELS AND VERTICAL/JAMB TRIM PIECES W/ PROGRESSIVELY INSTALLED EDGES. (ORDER THE SAME PANELS W/ EMBOSSED PLANET FITNESS LOGOS WHERE SHOWN ON RECEPTION DESK ELEVATIONS) CONTACT JAMIE McEDWARD TO ORDER AT 603–924–9128 OR JMCEDWARD@MARLITE.COM

RUBBER MAT FLOORING – **SUPPLIED BY OWNER – G.C. INSTALLED.**
RUBBER MAT #1 – BLACK W/ 20% YELLOW/PURPLE & ADHESIVE.
RUBBER MAT #2 – BLACK W/ 70% PURPLE & ADHESIVE.

VINYL WALL COVERING (VWC) – NORTHEAST COLOR 603.436.8210
- VWC #1: PF9007B (AT RELAXATION ZONE & FREE WEIGHTS)
- VWC #2: PF9009 (AT LOCKER ENTRANCES)
- VWC #3: NOT USED
- VWC #4: PF9003 (AT STRETCHING AREA & PF360 AREA)
- VWC #5: PF9015A (AT 30 MINUTE WORKOUT)

WOOD TRIM PROFILE ALONG TOP OF PVCP WAINSCOTING – "FLEX MOULDING, INC." 11/16" X 2¼" #438 CASING PROFILE OR EQUIVALENT SHAPED AND SIZED WOOD PROFILE CAPABLE OF RECEIVING PAINT FINISH AND CAPABLE OF BEING INSTALLED ON CURVED SURFACES. SAND ALL WOOD PROFILES SMOOTH.

9 STRETCHING & ABS SOFFIT DETAIL

PROPOSED RENOVATION FOR:

PLANET FITNESS

19516 STATE ROUTE 410E
BONNEY LAKE, WASHINGTON 98391

MICHAEL J. PILKO, ARCHITECT
860 FIRST AVE, SUITE 9A
KING OF PRUSSIA, PA 19406
484-928-0650

10065 REGISTERED ARCHITECT
MICHAEL J. PILKO
STATE OF WASHINGTON

RHJ ASSOCIATES, P.C.
PROJECT MANAGEMENT
860 1ST AVE SUITE 9A
KING OF PRUSSIA, PA 19406
610 337 4555
www.rhjassoc.com

DATE: 5/19/2017	
REVISIONS	
2	TENANT CHANGES 8/08/2017

A.8

2017–0105

N:\Planet Fitness_JEG Viper_Bonney Lake WA_CD&CA_2017-0105\Drawings\Rev 02\Axx-Axx TR & LKR & GYM ELEV.dwg

FINISH SCHEDULE

NO.	ROOM	FLOOR MTRL	FLOOR SPECIAL FINISHES	BASE MTRL	NORTH WALL MTRL	NORTH WALL SPECIAL FINISHES	NORTH WALL P	EAST WALL MTRL	EAST WALL SPECIAL FINISHES	EAST WALL P	SOUTH WALL MTRL	SOUTH WALL SPECIAL FINISHES	SOUTH WALL P	WEST WALL MTRL	WEST WALL SPECIAL FINISHES	WEST WALL P	CEILING MTRL	CEILING P	CEILING HGT
101	VESTIBULE	MAT	SEE PLAN 1/A.5	G.T.	EXIST / GLAZ	PVCP	●	EXIST	—	●	EXIST / GLAZ	PVCP	●	GWB / GLAZ	PVCP	●	A.C.T.		±9'-0"
102	RECEPTION	C.T. / R.M.	●	●	GWB	●		EXIST / GLAZ	PVCP		GWB	●		GWB	●		E.D / GWB	●	EXIST / 10'-0"
103	LOUNGE △2	C.T.			GLAZ / GWB			GWB	●		●			GLAZ / GWB			A.C.T.		10'-0"
104	HALL	●			GWB			●				●		GWB			●		●
105	HALL	●			●	●			●			●		●	●				
106	HALL	C.T.				PVCP			PVCP			PVCP			PVCP				
107	TANNING	R.M.				FRP #2		●	FRP #2			FRP #2			FRP #2				
108	TANNING	●				●		GWB	●			●			●				
109	TONING	●		●		●		EXIST / GWB	●		●	●			●				
110	TONING	R.M.		G.T.		FRP #2		EXIST	FRP #2		GWB	FRP #2			FRP #2				
111	UTILITY △2	VCT		VCB		—		EXIST	P.W.		EXIST	P.W.			—				
112	TONING	R.M.		G.T.		FRP #2		GWB	FRP #2		EXIST	FRP #2			FRP #2				
113	TANNING	●		●		●		●	●		GWB	●			●				
114	TANNING					●			●		GWB	●			●				
115	TANNING					FRP #2	●		FRP #2	●	GWB	FRP #2	●		FRP #2	●			●
116	RELAXATION ZONE			●		PVCP / VWC			PVCP / VWC		EXIST	PVCP / VWC			PVCP / VWC				10'-0"
117	WOMEN'S ENTRY	●		G.T.		PVCP / VWC			PVCP / VWC		GWB	PVCP / VWC			PVCP / VWC				9'-0"
118	WOMEN'S LOCKERS	R.M.		G.T. / C.T.	●	PVCP		●	PVCP		GWB	PVCP		●	PVCP				10'-4"
119	UTILITY	VCT		VCB	GWB	FRP #1		GWB	FRP #1		GWB	FRP #1		GWB	FRP #1				10'-0"
120	WOMEN'S SHOWERS	C.T.		C.T.	GWB / D.C.B.	C.T.	●	GWB / D.C.B.	C.T.	●	GWB / D.C.B.	C.T.	●	GWB / D.C.B.	C.T.	●			10'-6"
121	WOMEN'S TOILETS	C.T.		C.T.	GWB	C.T.	●	GWB	C.T.	●	GWB	C.T.	●	GWB	C.T.	●			10'-6"
122	JANITOR'S CLOSET	VCT		VCB	●	FRP #1		●	FRP #1		●	FRP #1		●	FRP #1				10'-0"
123	JANITOR'S CLOSET	VCT		VCB	●	FRP #1		●	FRP #1		●	FRP #1		●	FRP #1				10'-0"
124	MEN'S TOILETS	C.T.		C.T.	GWB	C.T.	●	GWB	C.T.	●	GWB	C.T.	●	GWB	C.T.	●			10'-6"
125	MEN'S SHOWERS	C.T.		C.T.	GWB / D.C.B.	C.T.	●	GWB / D.C.B.	C.T.	●	GWB / D.C.B.	C.T.	●	GWB / D.C.B.	C.T.	●			10'-6"
126	UTILITY	VCT		VCB	GWB	FRP #1		GWB	FRP #1		GWB	FRP #1		GWB	FRP #1				10'-0"
127	MEN'S LOCKER	R.M.		G.T. / C.T.	●	PVCP		●	PVCP		●	PVCP		●	PVCP				10'-4"
128	MEN'S ENTRY	R.M.		G.T.	●	PVCP / VWC		●	PVCP / VWC		●	PVCP / VWC		●	PVCP / VWC		●		9'-0"
129	UNISEX T.R.	C.T.		C.T.	GWB	C.T.	●	GWB	C.T.	●	GWB	C.T.	●	GWB	C.T.	●	A.C.T.		10'-0"
130	UNISEX SHOWER	C.T.		C.T.	D.C.B.	C.T.		D.C.B.	C.T.		D.C.B.	C.T.		D.C.B.	C.T.		A.C.T. / C.T.		10'-6" / 8'-6"
131	STRETCHING & ABS	R.M.		G.T.	GWB	PVCP / VWC		GWB	PVCP / VWC		GWB	PVCP / VWC		GWB	PVCP / VWC		A.C.T.		10'-0"
132	SPRINKLER RISER	SLAB		—	EXIST	—		EXIST	—		EXIST	—		EXIST	—		—		EXIST
133	30 MINUTE WORKOUT	R.M.		G.T.	GWB	PVCP / VWC		FENCE	—		GWB	PVCP / VWC		GWB	PVCP / VWC		A.C.T.		10'-0"
134	OPEN WORKOUT AREA	R.M.		G.T.	EXIST / GWB	PVCP / VWC	●	EXIST / GWB	PVCP	●	GWB	PVCP / VWC	●	GWB	PVCP	●	E.D.	●	EXIST
135	EXIST. ELECTRICAL ROOM	SLAB		—	EXIST	—		EXIST	—		EXIST	—		EXIST	—		EXIST		EXIST
136	HALL	SLAB	●	VCB	EXIST	—	●	EXIST / GWB	—	●	GWB	—	●	EXIST / GWB	—	●	A.C.T.		10'-0"
137	STORAGE	SLAB	SEE PLAN 1/A.5	VCB	GWB	—	●	GWB	—	●	EXIST	—		EXIST	—		EXIST		EXIST

LEGEND:

EXIST = EXISTING
C.T = CERAMIC TILE
VCB = VINYL COVE BASE
PVCP = PVC PANELING
R.M. = RUBBER MAT
MAT = WALK OFF MAT

A.C.T. = ACOUSTICAL CEILING TILE AND GRID (SEE REFLECTED CEILING PLAN FOR TYPE)
GWB = GYPSUM WALL BOARD
FRP = FIBERGLASS REINFORCED PANELING
P.W. = PLYWOOD TO 8'-0" A.F.F. - PAINT
GLAZ = NEW GLAZING
VCT = VINYL COMPOSITION TILE

"P" COLUMNS = SURFACES TO BE PAINTED
E.D. = EXISTING ROOF DECK
VWC = VINYL WALL PAPER (SEE ELEVATIONS FOR TYPE)
SLAB = EXISTING EXPOSED FLOOR SLAB
G.T. = GRANITE TILE
D.C.B. = DUROCK CEMENT BOARD

DOOR SCHEDULE

NO.	SIZE	LOC.	DOOR MTRL / CORE	DOOR FINISH	DOOR TYPE	FRAME MTRL.	FRAME FINISH	FRAME TYPE	HARD-WARE	LABEL	REMARKS
E.1	EXIST	REAR ENTRY	EXIST	EXIST	EXIST	EXIST	EXIST	EXIST	EXIST		EXISTING PANIC HARDWARE. FIX OR REPLACE ANY BROKEN HARDWARE.
E.2	EXIST	ELECTRIC ROOM	EXIST	EXIST	EXIST	EXIST	EXIST	EXIST	EXIST		
E.3	EXIST	SPRINKLER CLOSET	EXIST	RE-PAINT	EXIST	EXIST	RE-PAINT	EXIST	EXIST		REPAINT SIDE EXPOSED TO ROOM #131.
E.4	EXIST	STORAGE	EXIST	EXIST	EXIST	EXIST	EXIST	EXIST	EXIST		EXISTING ROLL UP DOOR. REPAIR ANY BROKEN TRACK OR HARDWARE. INSTALL LOCKING BARS IF NONE EXIST.
1	(2) 3'0"x8'0"x1/2"	LOUNGE	TEMPERED GLAZING	PREFINISHED	A	ALUMINUM	CLAD	TOP & BOTTOM CHANNELS	1		SEE WINDOW SCHEDULE.
2	3'0"x8'0"x1/2"	RELAXATION ZONE	TEMPERED GLAZING	PREFINISHED	B	ALUMINUM	CLAD	TOP & BOTTOM CHANNELS	2		
3	±3'0"x7'0"x1 3/4"	STRETCHING AREA EXIT	H.M. / INSUL	PAINT	C	H.M.	PAINT	1	3		PAINT EXTERIOR SIDE OF DOOR AND FRAME TO MATCH BUILDING STANDARD EXTERIOR DOORS ALONG BACK OF BUILDING. DOOR U-FACTOR TO BE U-0.61 MAXIMUM. G.C. TO V.I.F. EXISTING M.O. SIZE.
4	3'0"x7'0"x1 3/4"	UTILITY & JAN. CLOSETS	WOOD / SOLID	PAINT	C	H.M.	PAINT	1	4		
5	3'0"x7'0"x1 3/4"	SPA & UNISEX ROOMS	WOOD / SOLID	PAINT	C	H.M.	PAINT	1	5		
6	3'0"x5'0"x1 3/4"	ADA TOILET STALL	WOOD / LOUVERED	PAINT	E	H.M.	PAINT	2	6		
7	2'6"x5'0"x1 3/4"	TOILET STALL	WOOD / LOUVERED	PAINT	E	H.M.	PAINT	2	7		
8	(2)3'0"x7'0"x1 3/4"	STORAGE	WOOD / SOLID	PAINT	D	H.M.	PAINT	3	8		
9	3'0"x7'0"x1 3/4"	EXIT HALL	WOOD / SOLID	PAINT	C	H.M.	PAINT	1	9		
10	(2)3'0"x7'0"x1 3/4"	FRONT DOORS	ALUM. / GLAZ	PREFINISHED	F	ALUMINUM	PREFINISHED	SEE WINDOW SCHEDULE	10		DOOR U-FACTOR TO BE U-0.61 MAXIMUM
11	(2)3'0"x7'0"x1 3/4"	VESTIBULE	TEMPERED GLAZING	PREFINISHED	A	ALUMINUM	CLAD	TOP & BOTTOM CHANNELS	11		SEE WINDOW SCHEDULE.

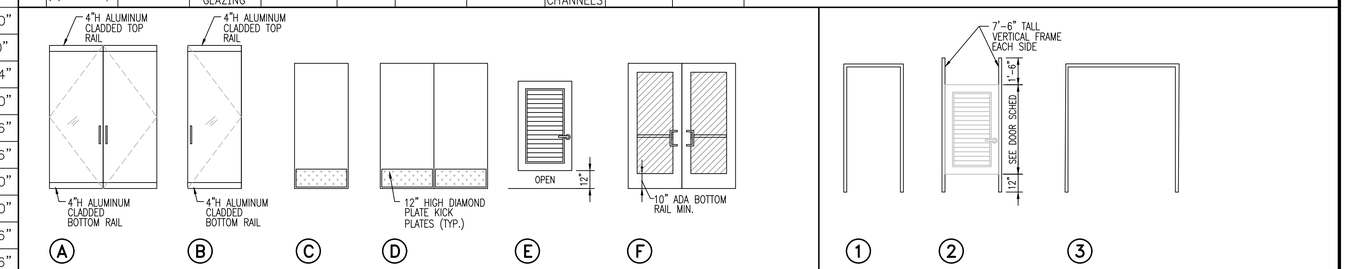

1 DOOR TYPES — NO SCALE

SET #1
2 RECESSED BOTTOM PIVOT HINGES W/ INTEGRATED CLOSERS
4 1"ø 12" LONG 'C' SHAPED FIXED ALUMINUM PULL HANDLES
2 DOOR STOPS
1 FLOATING TRANSOM BAR

SET #2
1 RECESSED BOTTOM PIVOT HINGE W/ INTEGRATED CLOSER
2 1"ø 12" LONG 'C' SHAPED FIXED ALUMINUM PULL HANDLES
1 DOOR STOP

SET #3
1 ROTON CONTINUOUS HINGE
1 PANIC HARDWARE RIM DEVICE W/ EXPOSED VERTICAL ROD & EXTERIOR GRADE LEVERSET - LOCK
3 SILENCERS
1 (3/8" MAX. HIGH) THRESHOLD
1 CLOSER
1 DIAMOND PLATE KICK PLATE (INTERIOR SIDE)
1 RAIN DRIP
1 DOOR SWEEP
1 WEATHERSTRIPPING PACKAGE

SET #4
3 HINGES
1 LEVERSET - LOCK [STOREROOM FUNCTION]
3 SILENCERS
1 DOOR STOP
2 DIAMOND PLATE KICKPLATES

SET #5
3 HINGES
1 LEVERSET - LOCK [PRIVACY FUNCTION]
3 SILENCERS
1 DOOR STOP
2 DIAMOND PLATE KICKPLATES
1 AUTOMATIC DOOR BOTTOM - TANNING / TONING / UNISEX SIDE OF DOOR

SET #6
3 SELF CLOSING HINGES
1 LEVERSET - LOCK [PRIVACY FUNCTION]
2 SILENCERS
1 DOOR STOP - WALL MOUNTED

SET #7
3 HINGES
1 LEVERSET - LOCK [PRIVACY FUNCTION]
2 SILENCERS
1 DOOR STOP - WALL MOUNTED

SET #8
6 HINGES W/ 180 DEGREE SWIVEL
1 LEVERSET - LOCK [STOREROOM FUNCTION]
2 SILENCERS
1 PAIR OF MANUAL FLUSHBOLTS
2 DIAMOND PLATE KICKPLATES

SET #9
3 HINGES
1 PANIC HARDWARE RIM DEVICE W/ EXPOSED VERTICAL ROD & LEVERSET PASSAGE FUNCTION
1 CLOSER
3 SILENCERS
1 DOOR STOP

SET #10
2 ROTON CONTINUOUS HINGES
2 PANIC HARDWARE DEVICES W/ CONCEALED VERTICAL RODS
2 CLOSERS
2 1"ø 12" LONG 'C' SHAPED PULL HANDLES
1 (3/8" MAX. HIGH) THRESHOLD
2 DOOR SWEEPS
1 WEATHERSTRIPPING PACKAGE
1 CYLINDER LOCK

SET #11
2 RECESSED BOTTOM PIVOT HINGES W/ INTEGRATED CLOSERS
4 1"ø 12" LONG 'C' SHAPED FIXED ALUMINUM PULL HANDLES
2 DOOR STOPS
1 FLOATING TRANSOM BAR

2 FRAME TYPES — NO SCALE

3 DOOR HARDWARE

LOCK KEYING NOTE:
ALL DOORS THROUGHOUT THE SUITE SHALL BE KEYED TO ONE MASTER KEY PROFILE. THE G.C. SHALL PROVIDE TO PLANET FITNESS (10) COPIES OF THE MASTER KEY UPON OBTAINING THE CERTIFICATE OF OCCUPANCY.

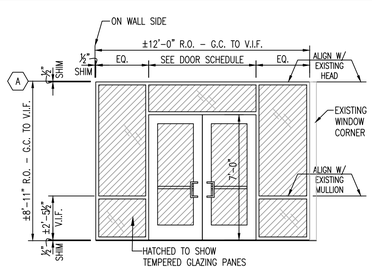

SYSTEM TO BE NEW KAWNEER TRIFAB 451T 2" WIDE BY 4 1/2" DEEP ALUMINUM STOREFRONT SYSTEMS W/ AN ANODIZED FINISH TO MATCH THE EXISTING STOREFRONT SYSTEM & WITH SILL RECEPTORS. GLAZING TO BE 1" THICK. GLAZING PANE LOCATION TO MATCH THE EXISTING STOREFRONT SYSTEMS (V.I.F.) MAXIMUM GLAZING U FACTOR OF 0.38 W/ A MAXIMUM SOLAR HEAT CAIN COEFFICIENT OF 0.40. ALL GLAZING TO BE TEMPERED. MAXIMUM DOOR U-FACTOR TO BE 0.61. INSTALL SYSTEMS IN THE SAME PLANE THAT THE PREVIOUSLY REMOVED STOREFRONT SYSTEMS OCCUPIED.

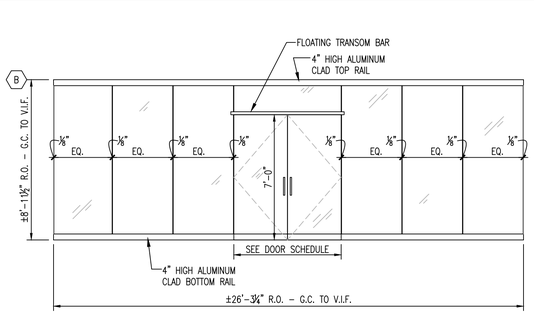

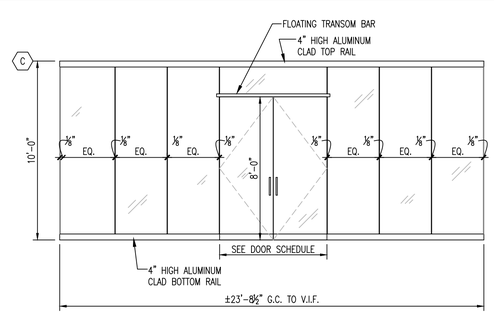

WINDOW SYSTEMS 'B' & 'C' TO BE BLUMCRAFT OF PITTSBURG, DORMA OR APPROVED EQUIVALENT W/ 1/2" THICK FULLY TEMPERED GLASS. EXPOSED TOP & BOTTOM RAILS TO BE ANODIZED FINISHED TO MATCH THE EXISTING BUILDING STOREFRONT WINDOW SYSTEMS.

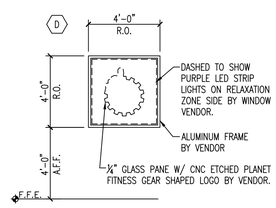

PF1829 BLACK CARD SPA LED WINDOW:
"THE GLOW" WINDOW SYSTEM IS SHIPPED FULLY ASSEMBLED BY THE SUPPLIER. INCLUDES (1) TRANSFORMER. G.C. TO WIRE. CONTACT NORTHEAST COLOR: 603-766-3722 TO ORDER.

4 WINDOW SCHEDULE

SCALE: 1/4"=1'-0"

PROPOSED RENOVATION FOR:
PLANET FITNESS
19516 STATE ROUTE 410E
BONNEY LAKE, WASHINGTON 98391

MICHAEL J. PILKO, ARCHITECT
860 FIRST AVE, SUITE 9A
KING OF PRUSSIA, PA 19406
484-928-0650

10965 REGISTERED ARCHITECT
MICHAEL J. PILKO
STATE OF WASHINGTON

RHJ ASSOCIATES, P.C.
PROJECT MANAGEMENT
860 1ST AVE, SUITE 9A
KING OF PRUSSIA, PA 19406
610 337 4555
www.rhjassoc.com

DATE: 5/19/2017
REVISIONS
△2 TENANT CHANGES 8/08/2017

A.9

2017-0105

Y:\Planet Fitness_JEG Viper_Bonney Lake WA_CD&CA_2017-0105\Drawings\Rev #2\A09 SCHED.dwg

DECORATIVE SIGNAGE SCHEDULE

SIGN ID	DESCRIPTION	MOUNTING APPLICATION	MOUNTING HEIGHT
1	PLANET FITNESS LOGO STICKER	SURFACE APPLIED TO CENTER OF STOREFRONT DOOR	CENTER OF SIGN 64" A.F.F. – O.C. OF DOOR
2	WEB SITE ADDRESS STICKER	SURFACE APPLIED TO LEFT STOREFRONT DOOR	CENTER OF SIGN 16" A.F.F. – O.C. OF DOOR
3	N/A	—	—
4	RIGHT POINTING "LEAVE EGOS HERE" ARROW SIGN	SURFACE APPLIED TO CENTER OF VESTIBULE WINDOW	SEE ELEVATION 5B/A.13. MOUNT BACK TO BACK TO SIGN #59.
5	CELL PHONE SIGN	WALL MOUNTED	CENTER OF SIGN 64" A.F.F.
6	DRESS CODE SIGN	WALL MOUNTED	CENTER OF SIGN 64" A.F.F.
7	"www.planetfitness.com" RECTANGULAR STICKER	SURFACE APPLIED TO GLAZING	BOTTOM OF STICKER ALONG TOP OF INTERMEDIATE HORIZONTAL MULLION
8	"BLACK CARD" BENEFITS SIGN	SUCTION CUP & HOOKS THROUGH GROMMET HOLES	CENTER SIGN ON GLAZING. CENTER 72" A.F.F.
9	CUT METAL "GEAR" AND TANNING BOOTH NUMBER	SURFACE APPLIED TO CENTER OF DOOR	CENTER OF SIGN 64" A.F.F. CENTER ON DOOR.
10	N/A	—	—
11	12"Wx12"H PIZZA & BAGEL SIGN	WALL MOUNTED	CENTER OF SIGN 64" A.F.F.
12	8'X8' ILLUMINATED "MISSION STATEMENT" SIGN	WALL MOUNTED	SEE ELEVATION 1/A.12
13	4'X6' ILLUMINATED FITNESS GRID SCHEDULE	WALL MOUNTED ABOVE RECEPTION DESK	SEE ELEVATION 1/A.12
14	PLANET FITNESS GEAR SHAPED SIGN	WALL MOUNTED	SEE ELEVATION 1/A.11
15	N/A	—	—
16	"MEMBER CHECK IN" GEAR	MOUNTED TO DESK FRONT	VERTICALLY CENTERED ON DESK'S FRONT SURFACE. HORIZONTALLY CENTERED ON DESK'S FRONT SURFACE.
17	"BLACK CARD SPA" 3D LETTERS SIGN	METAL CLIP ATTACHED TO SOFFIT	SEE ELEVATION 1/A.11 & 1/A.12
18	PLANET FITNESS GEAR SHAPED CLOCK	WALL MOUNTED – HARDWIRED TO WALL	SEE ELEVATION 2/A.11 & 3/A.11
19	"LUNK ALARM" SIGN & LIGHT	WALL MOUNTED W/ STANDOFFS – HARDWIRED TO WALL	SEE ELEVATION 1/A.11
20	"RE-RACK WEIGHTS" SIGN	WALL MOUNTED	CENTER OF SIGN 64" A.F.F.
21	TV CHANNEL NUMBER SIGNS	ATTACH TO TV – SEE PLAN FOR NUMBER ORDER	CENTERED ON BOTTOM OF TV FRAME
22	"WIPE EQUIPMENT" SIGN	WALL MOUNTED	ALIGN BOTTOM OF SIGN W/ SIGN #27
23	"FREE WIFI" SIGN	WALL MOUNTED	CENTER OF SIGN 64" A.F.F.
24	"= NO CRITICS" 3D YELLOW LETTERS SIGN	METAL CLIP ATTACHED TO WALL	SEE ELEVATION 1/A.11
25	"EMERGENCY EXIT ONLY ALARM WILL SOUND" STICKER	SURFACE APPLIED TO DOOR	CENTER OF SIGN 70" A.F.F.
26	"PF BONNEY LAKE" 3D LETTERS SIGN	METAL CLIP ATTACHED TO WALL	SEE ELEVATION 3/A.11
27	"30 MINUTE WORKOUT" RULES SIGN	WALL MOUNTED	BOTTOM OF SIGN 6" ABOVE TOP OF WAINSCOTING TRIM
28	"30 MINUTE WORKOUT" THUMPS UP GEAR SHAPED SIGN	SOFFIT MOUNTED	SEE ELEVATION 2/A.11

DECORATIVE SIGNAGE SCHEDULE

SIGN ID	DESCRIPTION	MOUNTING APPLICATION	MOUNTING HEIGHT
29	"EYE PROTECTION" SIGN	WALL MOUNTED	CENTER OF SIGN 64" A.F.F.
30	TRAFFIC STOP LIGHT	MOUNT TO U.S. OF SOFFIT ABOVE. NO EXPOSED WIRING.	CENTER ON OPENING
31	"UTILITY ROOM" STICKER	SURFACE APPLIED TO DOOR	APPLY SIGN VERTICALLY – HINGE SIDE
32	"MEN'S LOCKER ROOM" GEAR SHAPED SIGN	WALL MOUNTED	CENTER OF SIGN 74" A.F.F.
33	CUT METAL MALE SYMBOL SIGN	WALL MOUNTED	CENTER OF SIGN 74" A.F.F.
34	CUT METAL FEMALE SYMBOL SIGN	WALL MOUNTED	CENTER OF SIGN 74" A.F.F.
35	"WOMEN'S LOCKER ROOM" GEAR SHAPED SIGN	WALL MOUNTED	CENTER OF SIGN 74" A.F.F.
36	"PLEASE WIPE DOWN TANNING BEDS" SIGN	WALL MOUNTED	CENTER OF SIGN 64" A.F.F.
37	"PF360" CUT LETTER SIGN	METAL CLIP ATTACHED TO WALL	SEE ELEVATION 2B/A.12
38	"LOCK ALL VALUABLES" SIGN	WALL MOUNTED	CENTER OF SIGN 64" A.F.F.
39	"LOCKER ROOM CHECKED" SIGN	WALL MOUNTED	CENTER OF SIGN 64" A.F.F.
40	"WELCOME TO THE JUDGEMENT FREE ZONE" 3D LETTERS	METAL CLIP ATTACHED TO WALL	SEE ELEVATION 1/A.11
41	"JANITOR'S CLOSET" STICKER	SURFACE APPLIED TO DOOR	APPLY SIGN VERTICALLY – HINGE SIDE
42	SOCIAL MEDIA ICONS – 2 SIDED	SURFACE APPLIED TO GLAZING	CENTER OF SIGN 64" A.F.F.
43	TV CHANNEL SIGNS	ATTACH TO TV – SEE PLAN FOR CHANNEL NAME ORDER	CENTERED ON TOP OF TV
44	CUT METAL "GEAR" & TOTAL BODY ENHANCEMENT NUMBER	SURFACE APPLIED TO DOOR	CENTER OF SIGN 64" A.F.F. – CENTERED ON DOOR.
45	"TOTAL BODY ENHANCEMENT" TEXT	SURFACE APPLIED TO DOOR	APPLY SIGN VERTICALLY – HINGE SIDE
46	"PF GOES GREEN" SIGN	WALL MOUNTED	CENTER OF SIGN 64" A.F.F.
47	INDIVIDUAL NUMBER STICKERS #1–#20	SURFACE APPLIED TO FLOOR & STEPS	N/A
48	"FEMININE DISPOSAL" SIGN	STALL MOUNTED	CENTER OF SIGN 64" A.F.F.
49	INDEPENDENTLY OWNED & OPERATED STICKER	SURFACE APPLIED TO DOOR GLAZING	BOTTOM RIGHT CORNER OF STOREFRONT DOOR GLAZING
50	ALUMINUM "CLEANING STATION" SIGN	WIRED TO YELLOW TRASHCANS	CENTER VERTICALLY ON TRASH CAN BARREL
51	ALUMINUM "THANK YOU" SIGN	WIRED TO PURPLE TRASHCANS	CENTER VERTICALLY ON TRASH CAN BARREL
52	"FLUSH ONLY TOILET PAPER" SIGN	WALL MOUNTED	CENTER OF SIGN 64" A.F.F.
53	"DRINKS PRICE" GEAR STICKER	SURFACE APPLIED TO FRIG. GLASS	CENTER ON DOOR
54	PF360 DIRECTIONS SIGN	WALL MOUNTED	MOUNT BOTTOM 2" ABOVE TOP OF WAINSCOTING TRIM
55	PF360 TRAINING ONLY SIGN	WALL MOUNTED	MOUNT O.C. ABOVE SIGN #54
56	PF360 LOGO	WALL MOUNTED	CENTER BETWEEN TOP OF WAINSCOTING TRIM & U.S. OF DROP CEILING

DECORATIVE SIGNAGE SCHEDULE

SIGN ID	DESCRIPTION	MOUNTING APPLICATION	MOUNTING HEIGHT
57	"LOCKS PURCHASEABLE" SIGN	WALL MOUNTED	CENTER OF SIGN 64" A.F.F.
58	"STRETCHING & CORE TRAINING" SINTRA 3D LETTER SIGN	METAL CLIP ATTACHED TO SOFFIT	SEE ELEVATION 2/A.11 & 1/A.12
59	LEFT POINTING "LEAVE EGOS HERE" ARROW SIGN	SURFACE APPLIED TO CENTER OF VESTIBULE WINDOW	SEE ELEVATION. MOUNT BACK TO BACK TO SIGN #4
60	"30 MINUTE WORKOUT" 3D LETTERS SIGN	METAL CLIP ATTACHED TO SOFFIT	CENTER VERTICALLY ON SIGN #28. SEE ELEVATION 2/A.11
61	12"X12" "30 MINUTE WORKOUT ONLY" SIGN	WALL MOUNTED	MOUNT CENTERED ABOVE SIGN #22
62	"IMPORTANT STUFF – DON'T LOSE IT" SIGN	WALL MOUNTED	CENTER OF SIGN 64" A.F.F.
63	"YOU BELONG!" 3D LETTERS SIGN	METAL CLIP ATTACHED TO WALL	SEE ELEVATION 2/A.11
64	"EYE PROTECTION" EASEL SIGN	SITS ON RECEPTION DESK	N/A
65	N/A	—	—
66	"PE @ PF – IT'S GYM CLASS – WHISTLE" SIGN	WALL MOUNTED	CENTER OF SIGN 78" A.F.F.
67	"PE @ PF – WE'LL SHOW YOU THE ROPES" SIGN	WALL MOUNTED	CENTER OF SIGN 78" A.F.F.
68	"PE @ PF – IT'S GYM CLASS – DODGEBALL" SIGN	WALL MOUNTED	CENTER OF SIGN 72" A.F.F.
69	"30 MINUTE" GEAR SHAPED SIGN	CENTER VERTICALLY BETWEEN TOP OF WAINSCOTTING & U.S. OF CEILING	SEE ELEVATION 4B/A.12
70	"NO PROTEIN DRINKS IN FOUNTAIN" SIGN	WALL MOUNTED	CENTER OF SIGN 64" OVER FOUNTAIN WITHOUT BOTTLE FILLER.
71	N/A		
72	N/A	—	—
73	PLANET FITNESS GEAR SHAPED SIGN	WALL MOUNTED	SEE ELEVATION 4/A.11
74	"TANNING" TEXT	SURFACE APPLIED TO DOOR	APPLY SIGN VERTICALLY – HINGE SIDE
75	"RELAXATION ZONE" GEAR SIGN	WALL MOUNTED	CENTER OF SIGN 72" A.F.F.
76	"CLASS MEETS HERE" 3–SIDED SIGN	CHAIN HUNG FROM STRUCTURE ABOVE	U.S. SIGN @ 8'–0" A.F.F.
77	"PE @ PF FREE FITNESS TRAINING" SIGN	WALL MOUNTED	CENTER OF SIGN 74" A.F.F.
78	"NO GRUNT ZONE" GEAR	WALL MOUNTED	CENTER OF SIGN 82" A.F.F.
79	"NO LUNK @ PLANET FITNESS" GRAPHIC GEAR	WALL MOUNTED	CENTER OF SIGN 82" A.F.F.
80	"HYDRATE" 3D LETTERS SIGN	METAL CLIP ATTACHED TO SOFFIT	SEE ELEVATION 1/A.12
81	"WIPE EQUIPMENT" SIGN	WALL MOUNTED	CENTER OF SIGN 64" A.F.F.
82	BIGGEST LOSER DIRECTIONS	WALL MOUNTED	O.C. W/ ADJACENT SIGNS
83	CUT METAL "GEAR" & HYDROMASSAGE NUMBER	SURFACE APPLIED TO WALL	CENTER OF SIGN 72" – SIDE OF HYDROMASSAGE BED
84			

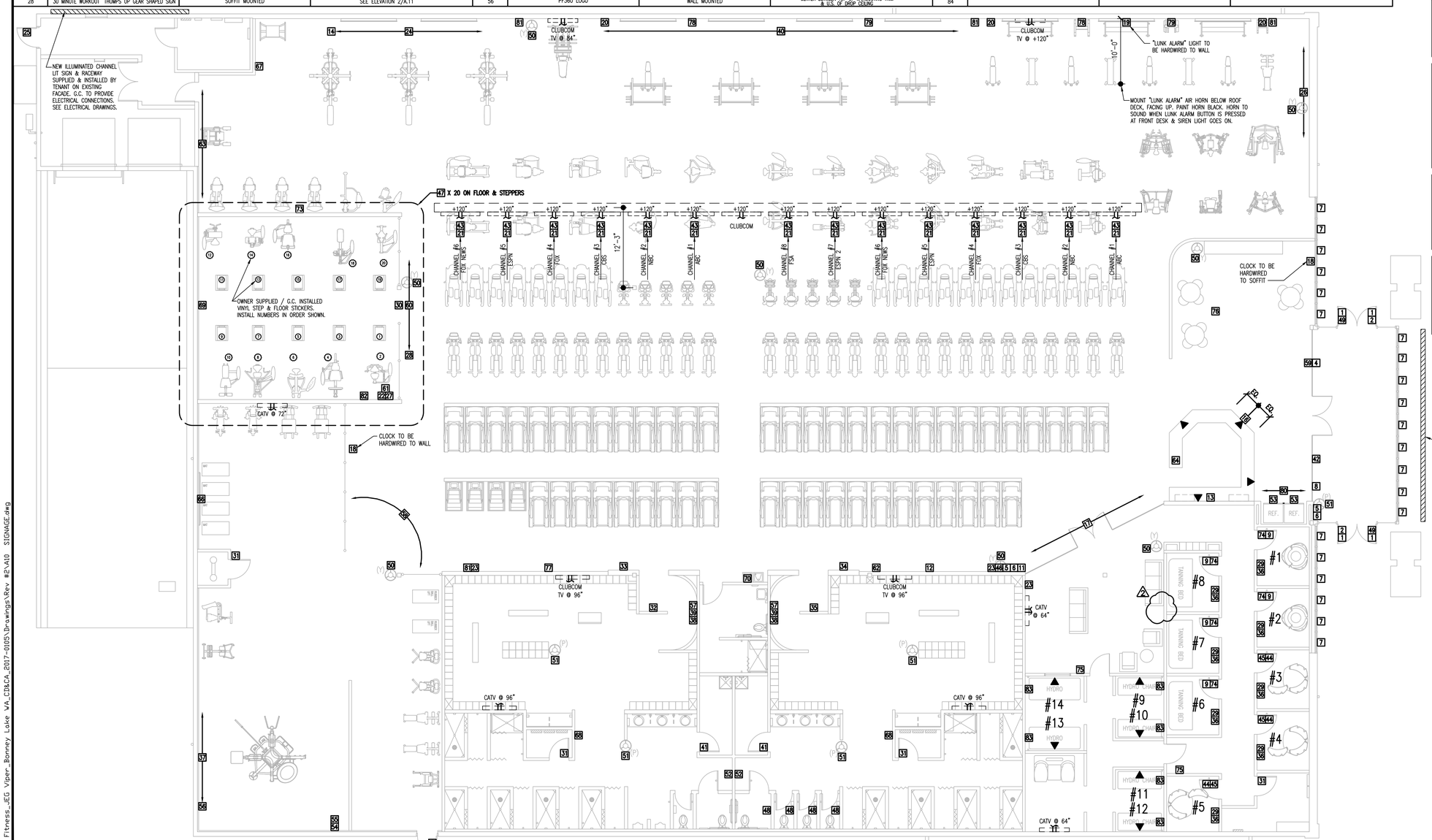

1 DECORATIVE SIGNAGE AND TEL/DATA/CATV LOCATION PLAN

SCALE: 1/8"=1'–0"

* OWNER TO SUPPLY ALL DECORATIVE SIGNAGE. G.C. TO MOUNT ALL SIGNS THROUGHOUT SCOPE OF WORK. PROVIDE SUCTION CUPS W/ HOOKS FOR SIGN TYPE #8. PROVIDE CHAINS FOR SIGN #76. PROVIDE METAL CLIPS FOR ALL SIGNS CALLED OUT AS METAL CLIP ATTACHED TO THE WALLS/SOFFITS. PROVIDE BLACK TIE WIRES FOR SIGNS #50 & #51.

* G.C.'S SIGN INSTALLER TO TRIM ENDS OF #7 SIGNS AS REQUIRED TO FIT BETWEEN THE VERTICAL WINDOW MULLIONS.

* G.C. TO WIPE DOWN ALL SIGNAGE AFTER INSTALLATION TO REMOVE FINGERPRINTS, ETC.

ADDITIONAL DECORATIVE SIGNAGE NOTE:

G.C. TO PROTECT OWNER SUPPLIED TEMPORARY DECORATIVE SIGNAGE INCLUDING:

- (10) OUT OF ORDER TAGS
- (1) TWO SIDED MALE/FEMALE IN LOCKER ROOM SIGN
- (1) UPGRADE TO BLACK CARD PORTABLE DISPLAY
- (2) 8.5"X11" FREE FITNESS COUNTER SIGNS
- (3) NEW BULBS CAUTION SIGN

TEMPORARY PRE–SALE SIGNAGE & PERMANENT EXTERIOR SIGNAGE NOTE:

ALL FACADE AND ALL STOREFRONT AFFIXED SIGNAGE SHALL BE IN ACCORDANCE W/ THE CITY OF BONNEY LAKE'S ZONING ORDINANCE SIGN CODE. TENANT'S SIGN VENDOR TO OBTAIN A SIGNAGE PERMIT FOR ALL EXTERIOR SIGNAGE VIA A SEPARATE PERMIT SUBMISSION AND PERMIT ISSUANCE.

MANDATORY INTERIOR DECORATIVE SIGNAGE INSTALLER NOTE:

G.C. SHALL HIRE ARC/DUNN BLUE REPROGRAPHICS TO HANG/MOUNT ALL INSTANCES OF INTERIOR DECORATIVE SIGNAGE ([SIGN]) & ALL VINYL PROFILES (V). SEE INTERIOR ELEVATIONS FOR VINYL PROFILE LOCATIONS. CONTACT DAWN TINSKEY AT (248)–489–1999.

SYMBOLS LEGEND:

- [3] NEW DECORATIVE SIGNAGE I.D. G.C. TO MOUNT SIGNACE. SEE DECORATIVE SIGNAGE SCHEDULE.
- ◀ OWNER SUPPLIED & INSTALLED TEL/DATA CONNECTION POINT IN PC ALCOVES & BELOW RECEPTION DESK COUNTER & BEHIND HYDROMASSAGE MACHINES. G.C. TO SUPPLY & INSTALL CONDUIT & PULL STRINGS FROM ALL CONNECTION POINTS TO A POINT ABOVE DROP CEILINGS.
- CATV OWNER SUPPLIED & INSTALLED COAXIAL CABLE TV CONNECTION ON WALL OR TV TRUSS.

TV WALL BLOCKING & CONDUIT NOTE:

G.C. TO SUPPLY & INSTALL WOOD BLOCKING IN ALL METAL STUD WALL MOUNTED TV LOCATIONS. G.C. TO SUPPLY & INSTALL CONDUIT & PULL STRINGS IN WALLS TO ABOVE ADJACENT DROP CEILINGS AT ALL WALL MOUNTED TV LOCATIONS AND ALONG THE NEW OWNER INSTALLED TV TRUSS TO ALL TRUSS MOUNTED TV'S. OWNER TO SUPPLY THE CABLE TV SERVICE, CABLE SERVICE BOXES, TV TRUSS, COAXIAL WIRING AND TV'S. CABLE BOXES TO BE LOCATED IN UTILITY ROOM #111 ON BUILT–IN SHELVING.

TEL/DATA & SECURITY NOTE:

ALL TEL/DATA & SECURITY TO BE BY TENANT. CONDUIT RUNS & PULL STRINGS TO BE MADE BY THE G.C. TO A G.C. SUPPLIED CONNECTION POINT LOCATED WITHIN UTILITY ROOM #111 FROM THE BUILDING ENTRANCE DEMARK POINT. (G.C. TO V.I.F. BUILDING ENTRANCE POINT.) INSTALL ADDITIONAL CONDUIT & PULL STRINGS IN THE WALL BEHIND THE RECEPTION DESK TO ABOVE THE DROP CEILING IN ROOM #104 AS WELL AS THROUGH THE RECEPTION DESK'S PERIMETER FRAMED LOW WALL & AT ALL WALL MOUNTED TV LOCATIONS FOR TENANT'S CATV WIRING.

PROPOSED RENOVATION FOR:

PLANET FITNESS

19516 STATE ROUTE 410E
BONNEY LAKE, WASHINGTON 98391

MICHAEL J. PILKO, ARCHITECT
860 FIRST AVE, SUITE 9A
KING OF PRUSSIA, PA 19406
484-928-0650

10065 REGISTERED ARCHITECT
MICHAEL J. PILKO
STATE OF WASHINGTON

RHJ ASSOCIATES, P.C.
PROJECT MANAGEMENT
860 1ST AVE, SUITE 9A
KING OF PRUSSIA, PA 19406
610 337 4555
www.rhjassoc.com

DATE: 5/19/2017	
REVISIONS	
2	TENANT CHANGES 8/08/2017

A.10

2017–0105

Y:\Planet Fitness_JEG Viper_Bonney Lake WA_CIRCA_2017-0105\Drawings\Rev #2\A10 SIGNAGE.dwg

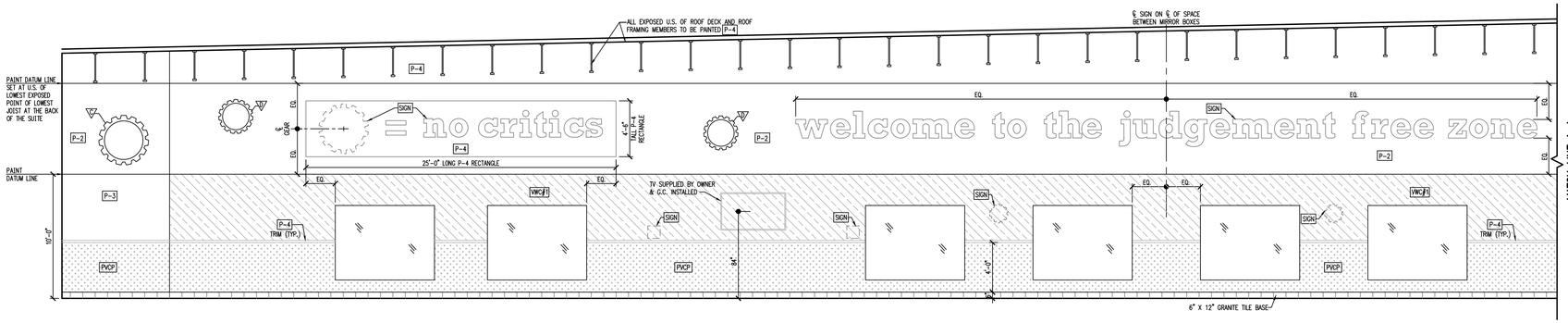

WALL FINISHES TAG LEGEND:

P-1	PAINT #1. SEE FINISH SELECTIONS
P-2	PAINT #2. SEE FINISH SELECTIONS
P-3	PAINT #3. SEE FINISH SELECTIONS
P-4	PAINT #4. SEE FINISH SELECTIONS
P-5	PAINT #5. SEE FINISH SELECTIONS
P-6	PAINT #6. SEE FINISH SELECTIONS
PVCP	PVC PANELS. SEE FINISH SELECTIONS
VWC#	VWC. SEE FINISH SELECTIONS
SIGN	NEW SIGN SUPPLIED BY OWNER & INSTALLED BY G.C. SEE DECORATIVE SIGNAGE & ACCESSORIES PLAN
▽	NEW VINYL DIE CUT PROFILE SUPPLIED BY OWNER & G.C. INSTALLED.

MANDATORY INTERIOR DECORATIVE SIGNAGE INSTALLER NOTE:

G.C. SHALL HIRE ARC/DUNN BLUE REPROGRAPHICS TO HANG/MOUNT ALL INSTANCES OF INTERIOR DECORATIVE SIGNAGE (SIGN) & ALL VINYL PROFILES (▽). CONTACT DAWN TINSKEY AT (248)-489-1999.

VINYL DIE CUT PROFILE SIZES:

- ▽ = 100"ø VINYL GEAR
- ▽ = 66"ø VINYL GEAR
- ▽ = 48"ø VINYL GEAR
- ▽ = 33"ø VINYL GEAR

1 PROJECT NORTH ELEVATION – ROOM #134

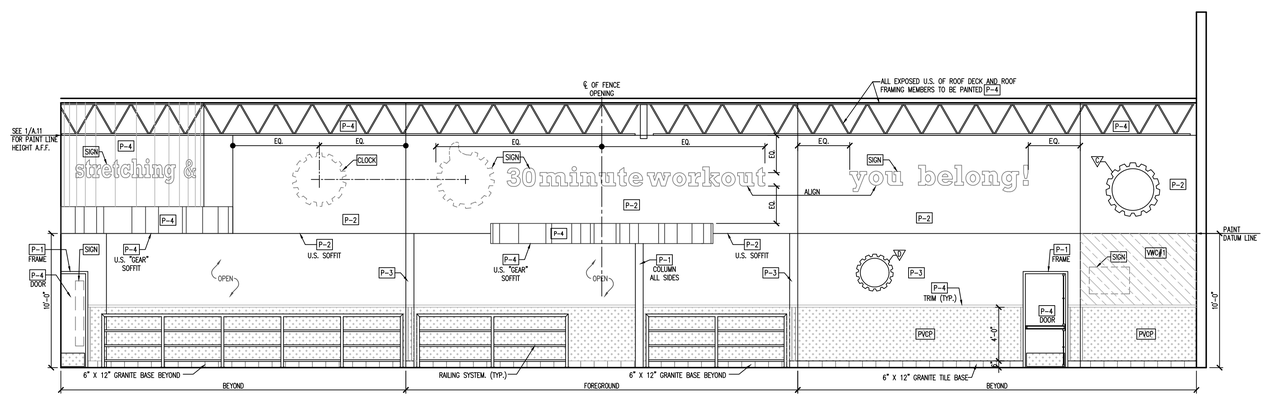

2 PROJECT WEST ELEVATION – ROOM #134

SCALE: 3/16"=1'-0"

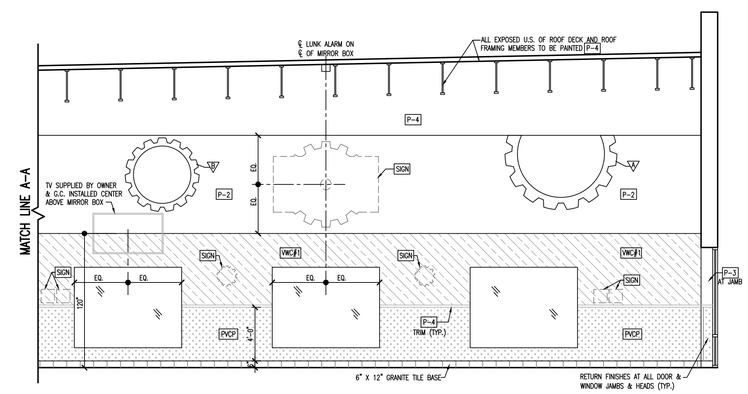

SCALE: 3/16"=1'-0"

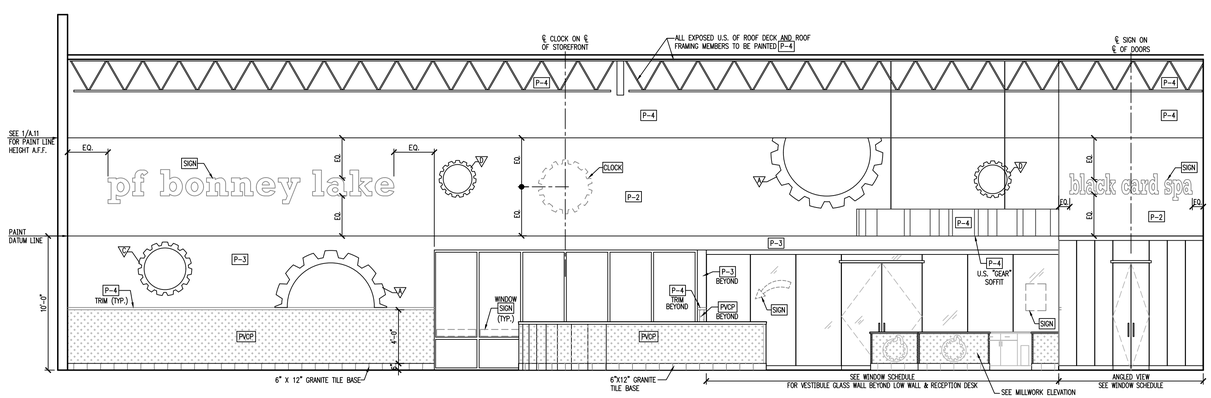

3 PROJECT EAST ELEVATION – ROOM #134

SCALE: 3/16"=1'-0"

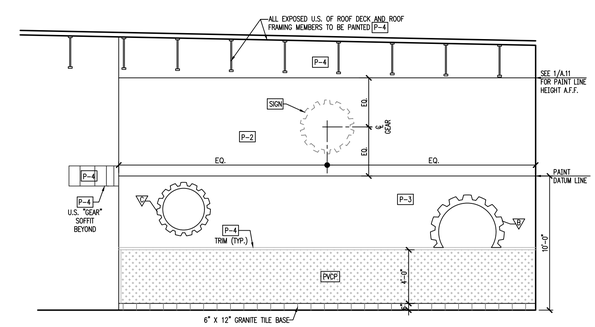

4 PARTIAL SOUTH ELEVATION – ROOM #134

SCALE: 3/16"=1'-0"

PROPOSED RENOVATION FOR:

PLANET FITNESS

19516 STATE ROUTE 410E
BONNEY LAKE, WASHINGTON 98391

MICHAEL J. PILKO, ARCHITECT
860 FIRST AVE, SUITE 9A
KING OF PRUSSIA, PA 19406
484-928-0650

10965 REGISTERED ARCHITECT
MICHAEL J. PILKO
STATE OF WASHINGTON

RHJ ASSOCIATES, P.C.
PROJECT MANAGEMENT
860 1ST AVE SUITE 9A
KING OF PRUSSIA, PA 19406
610 337 4555
www.rhjassoc.com

DATE: 5/19/2017

REVISIONS

A.11

2017-0105

Y:\Planet Fitness_JEG Viper_Bonney Lake WA_CD&CA_2017-0105\Drawings\Rev #2\Axx-Axx TR & LKR & GYM ELEV.dwg

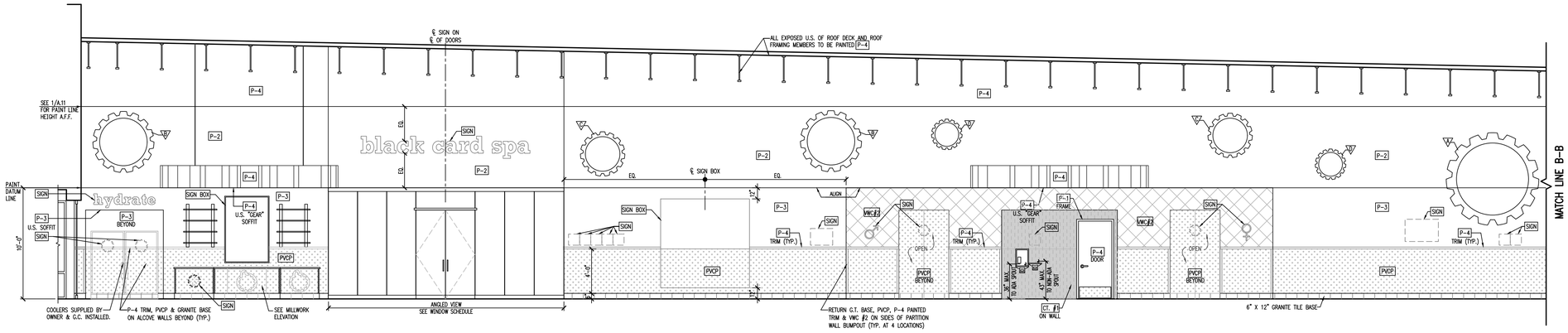

1 PROJECT SOUTH ELEVATION – ROOM #134

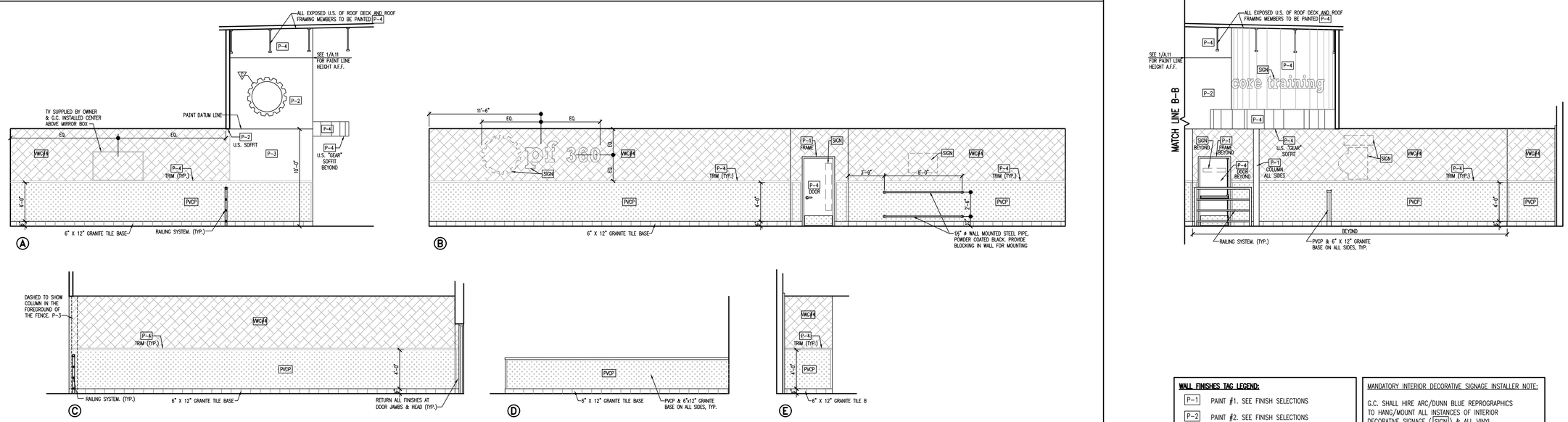

2 STRETCHING & ABS ELEVATIONS – ROOM #131

SCALE: 3/16"=1'-0"

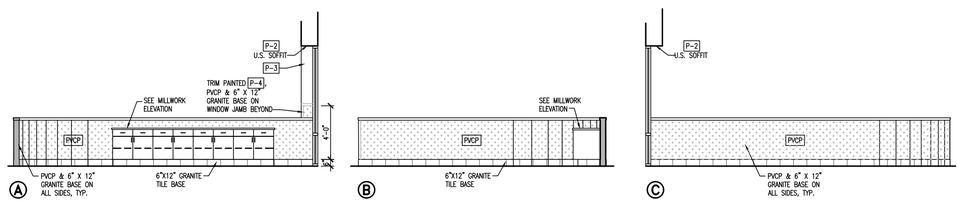

3 RECEPTION/OPEN WORKOUT AREA ELEVATIONS – ROOMS #102 & #134

SCALE: 3/16"=1'-0"

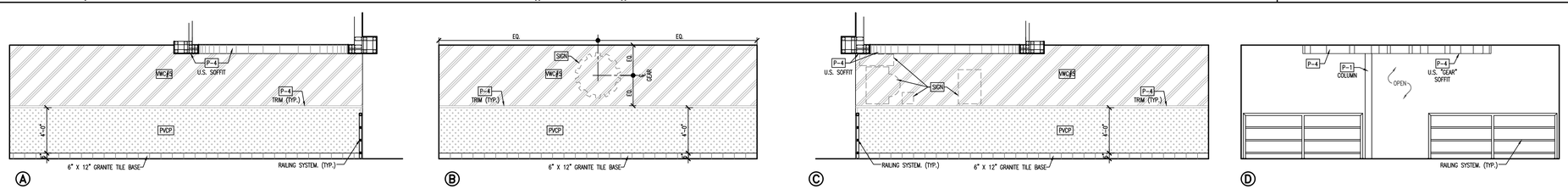

4 30 MINUTE WORKOUT ELEVATIONS – ROOM #133

SCALE: 3/16"=1'-0"

WALL FINISHES TAG LEGEND:

P-1	PAINT #1. SEE FINISH SELECTIONS
P-2	PAINT #2. SEE FINISH SELECTIONS
P-3	PAINT #3. SEE FINISH SELECTIONS
P-4	PAINT #4. SEE FINISH SELECTIONS
P-5	PAINT #5. SEE FINISH SELECTIONS
P-6	PAINT #6. SEE FINISH SELECTIONS
PVCP	PVC PANELS. SEE FINISH SELECTIONS
VWC#	VWC. SEE FINISH SELECTIONS
SIGN	NEW SIGN SUPPLIED BY OWNER & INSTALLED BY G.C. SEE DECORATIVE SIGNAGE & ACCESSORIES PLAN
V	NEW VINYL DIE CUT PROFILE SUPPLIED BY OWNER & G.C. INSTALLED.

MANDATORY INTERIOR DECORATIVE SIGNAGE INSTALLER NOTE:

G.C. SHALL HIRE ARC/DUNN BLUE REPROGRAPHICS TO HANG/MOUNT ALL INSTANCES OF INTERIOR DECORATIVE SIGNAGE (SIGN) & ALL VINYL PROFILES (V). CONTACT DAWN TINSKEY AT (248)-489-1999.

VINYL DIE CUT PROFILE SIZES:

- V = 100"ø VINYL GEAR
- V = 66"ø VINYL GEAR
- V = 48"ø VINYL GEAR
- V = 33"ø VINYL GEAR

PROPOSED RENOVATION FOR:

PLANET FITNESS

19516 STATE ROUTE 410E
BONNEY LAKE, WASHINGTON 98391

MICHAEL J. PILKO, ARCHITECT
860 FIRST AVE, SUITE 9A
KING OF PRUSSIA, PA 19406
484-928-0650

10965 REGISTERED ARCHITECT
MICHAEL J. PILKO
STATE OF WASHINGTON

RHJ ASSOCIATES, P.C.
PROJECT MANAGEMENT
860 1ST AVE, SUITE 9A
KING OF PRUSSIA, PA 19406
610 337 4555
www.rhjassoc.com

DATE: 5/19/2017

REVISIONS

A.12

2017-0105

H:\Planet Fitness_JEG Viper-Bonney Lake WA_CD&CA_2017-0105\Drawings\Rev #2\Axx-Hxx TR & LKR & GYM ELEV.dwg

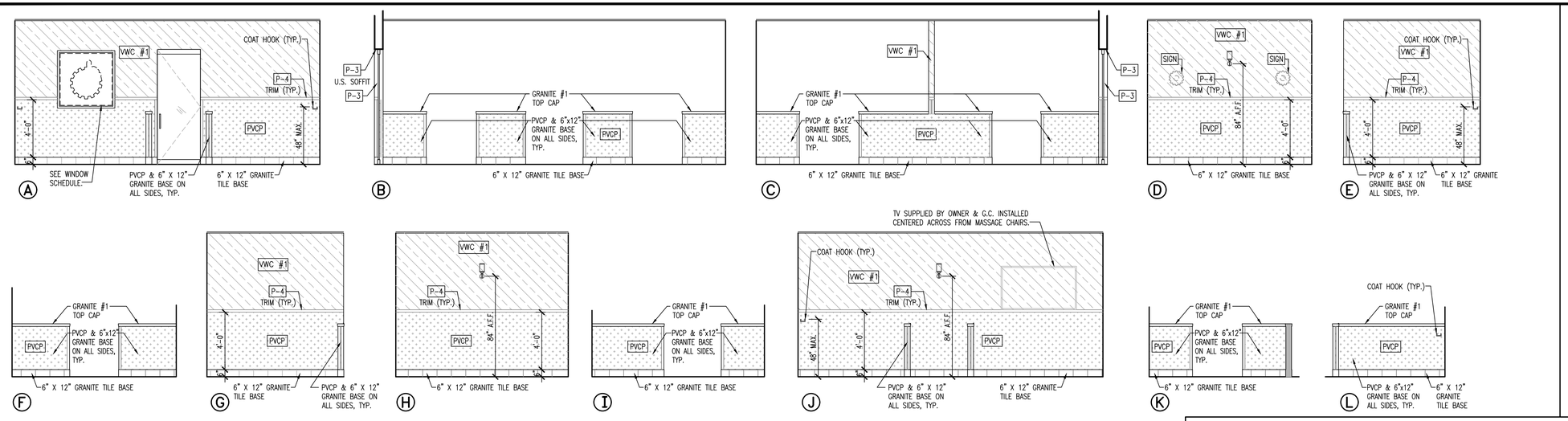

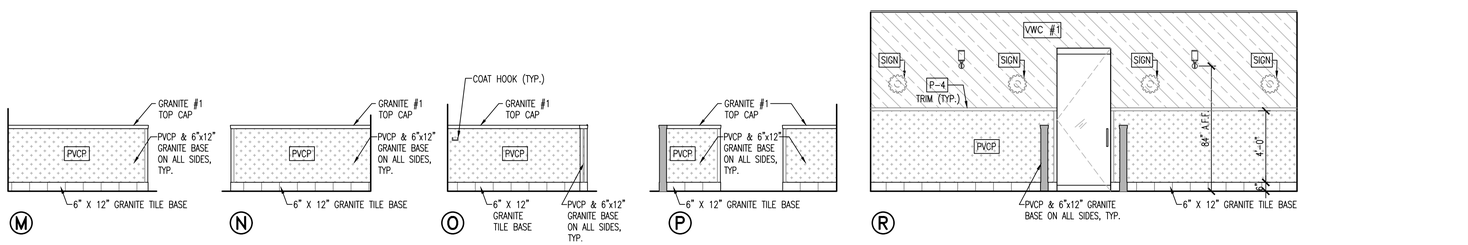

1 RELAXATION ZONE ELEVATIONS – ROOM #116

SCALE: 1/4"=1'-0"

WALL FINISHES TAG LEGEND:

P-1	PAINT #1. SEE FINISH SELECTIONS
P-2	PAINT #2. SEE FINISH SELECTIONS
P-3	PAINT #3. SEE FINISH SELECTIONS
P-4	PAINT #4. SEE FINISH SELECTIONS
P-5	PAINT #5. SEE FINISH SELECTIONS
P-6	PAINT #6. SEE FINISH SELECTIONS
PVCP	PVC PANELS. SEE FINISH SELECTIONS
VWC#	VWC. SEE FINISH SELECTIONS
SIGN	NEW SIGN SUPPLIED BY OWNER & INSTALLED BY G.C. SEE DECORATIVE SIGNAGE & ACCESSORIES PLAN
▽	NEW VINYL DIE CUT PROFILE SUPPLIED BY OWNER & G.C. INSTALLED.

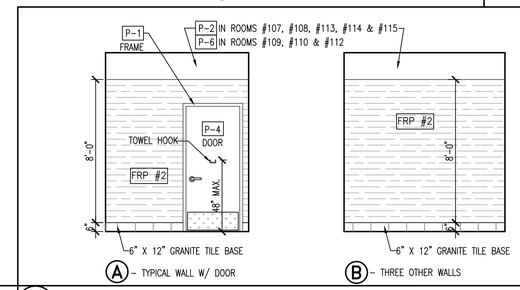

2 TYPICAL TANNING/TONING ROOM ELEVATIONS

SCALE: 1/4"=1'-0"

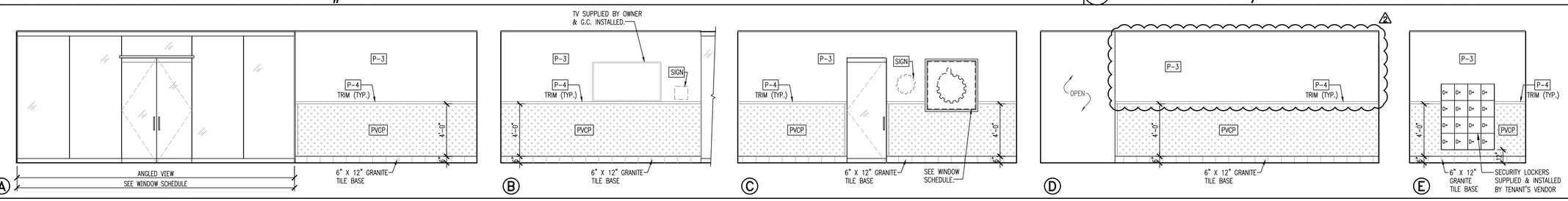

3 SPA LOUNGE & HALL ELEVATIONS – ROOM #103 & #104

SCALE: 1/4"=1'-0"

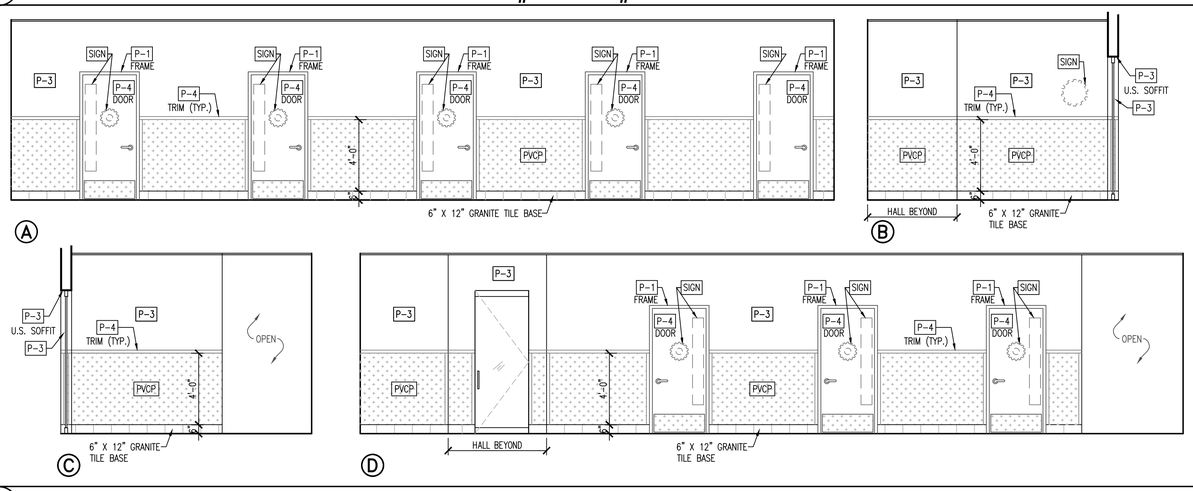

4 SPA HALL ELEVATIONS – ROOM #105 & #106

SCALE: 1/4"=1'-0"

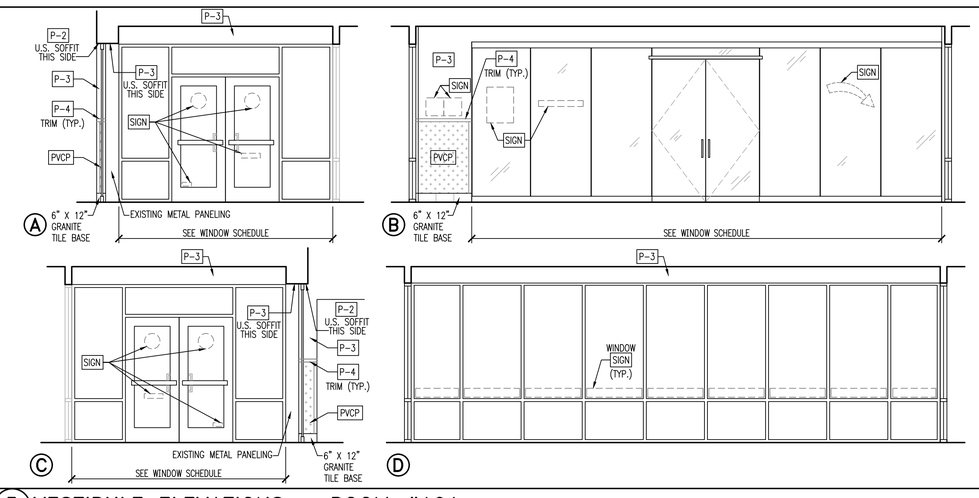

5 VESTIBULE ELEVATIONS – ROOM #101

SCALE: 1/4"=1'-0"

PROPOSED RENOVATION FOR:

PLANET FITNESS

19516 STATE ROUTE 410E
BONNEY LAKE, WASHINGTON 98391

MICHAEL J. PILKO, ARCHITECT
860 FIRST AVE, SUITE 9A
KING OF PRUSSIA, PA 19406
484-928-0650

10965 REGISTERED ARCHITECT
MICHAEL J. PILKO
STATE OF WASHINGTON

RHJ ASSOCIATES, P.C.
PROJECT MANAGEMENT
860 1ST AVE, SUITE 9A
KING OF PRUSSIA, PA 19406
610 337 4555
www.rhjassoc.com

DATE: 5/19/2017	
REVISIONS	
2	TENANT CHANGES 8/08/2017

A.13

2017-0105

Y:\Planet Fitness_JEG Viper_Bonney Lake WA_CD&CA_2017-0105\Drawings\Rev #2\Axx-Axx TR & LKR & GYM ELEV.dwg

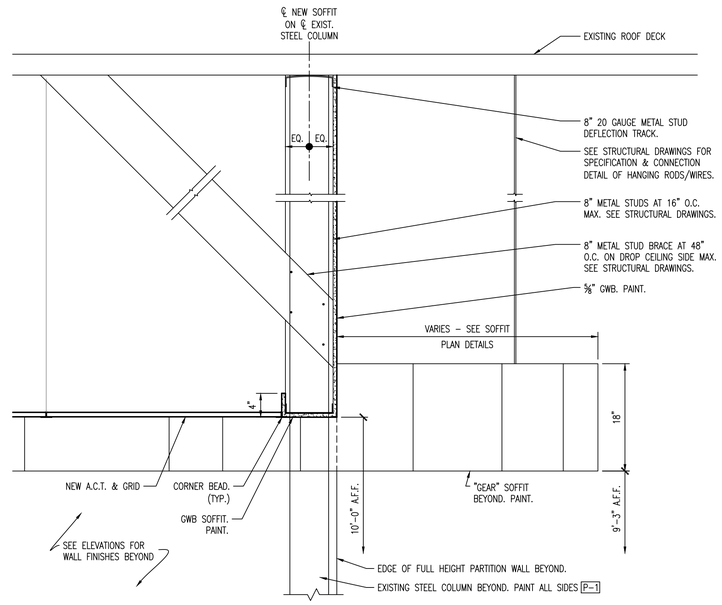

3 30 MIN. WORKOUT SOFFIT DETAIL

SCALE: 1"=1'-0"

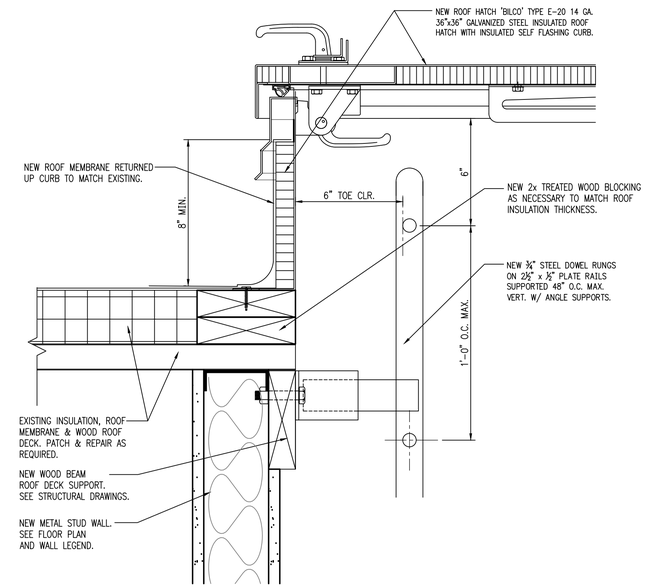

2 ROOF LADDER & HATCH DETAIL

SCALE: 3"=1'-0"

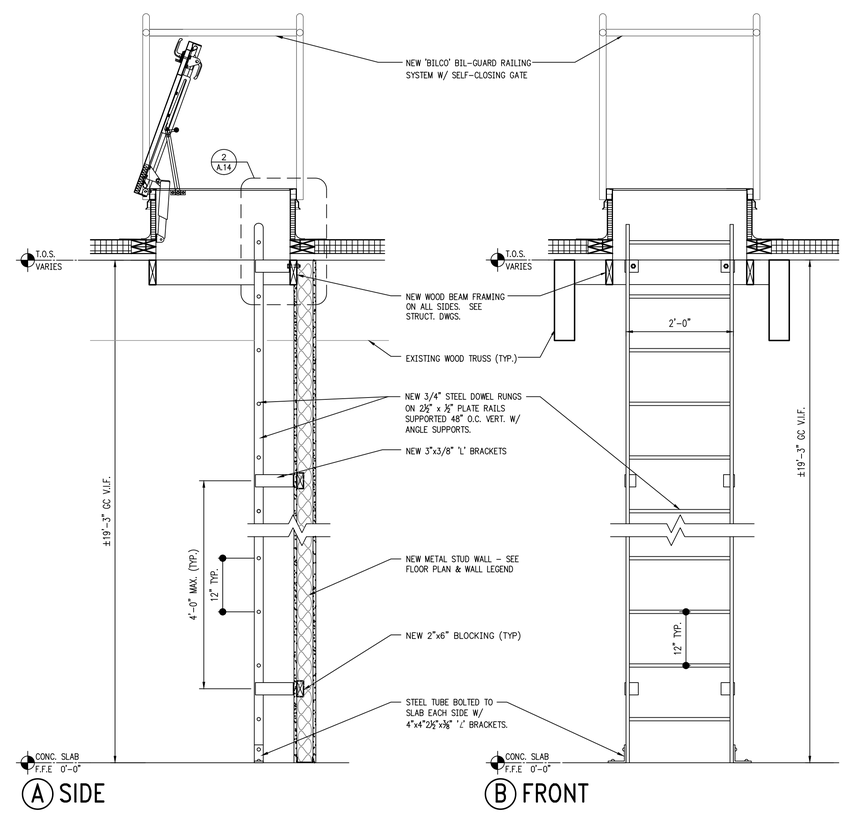

A SIDE

B FRONT

1 ROOF LADDER & HATCH ELEVATIONS

SCALE: 3/4"=1'-0"

PROPOSED RENOVATION FOR:

PLANET FITNESS

19516 STATE ROUTE 410E
BONNEY LAKE, WASHINGTON 98391

MICHAEL J. PILKO, ARCHITECT
860 FIRST AVE, SUITE 9A
KING OF PRUSSIA, PA 19406
484-928-0650

10965 REGISTERED ARCHITECT
MICHAEL J. PILKO
STATE OF WASHINGTON

RHJ ASSOCIATES, P.C.
PROJECT MANAGEMENT
860 1ST AVE. SUITE 9A
KING OF PRUSSIA, PA 19406
610 337 4555
www.rhjassoc.com

DATE: 5/19/2017

REVISIONS

A.14

2017-0105

Y:\Planet Fitness_JEG Viper_Bonney Lake WA_CD&CA_2017-0105\Drawings\Rev #2\Axx-Hxx TR & LKR & GYM ELEV.dwg

SECTION 0101 CONDITIONS OF THE CONTRACT

0101.1 AIA GENERAL CONDITIONS

1.1 "GENERAL CONDITIONS OF THE CONTRACT FOR CONSTRUCTION", DOCUMENT A-201-2007, ISSUED BY THE AMERICAN INSTITUTE OF ARCHITECTS, 2007 EDITION, IS HEREINAFTER REFERRED TO AS THE SPECIFICATIONS WITH THE SAME FORCE AS THOUGH FULLY REPEATED IN EACH SECTION. THE CONTRACTOR SHALL NOTIFY EACH OF HIS SUBCONTRACTORS TO BE FAMILIAR WITH ALL THESE REQUIREMENTS.

0101.2 CONTRACT

2.1 THE CONTRACT TO BE USED WILL BE THE AIA "STANDARD FORM OF AGREEMENT BETWEEN OWNER AND CONTRACTOR, STIPULATED SUM", EDITION, A-101-2007.

0101.3 DOCUMENTS

3.1 THE FOLLOWING FORMS ARE TO BE PART OF THE CONTRACT:

3.2 AIA GENERAL CONDITIONS A201 -2007
PARTIAL LIEN RELEASE - SEE 0110.24
FINAL LIEN RELEASE - SEE 0110.25
AIA CONTRACT A101-2007

* END OF SECTION

SECTION 0102 INSURANCE REQUIREMENTS

0102.1 CONTRACTORS INSURANCE REQUIREMENTS

1.1 THE FOLLOWING ARE THE INSURANCE REQUIREMENTS FOR THE GENERAL CONTRACTOR AND HIS SUB-CONTRACTORS FOR THIS PROJECT. THE GENERAL CONTRACTOR WILL BE REQUIRED TO SUBMIT CERTIFICATES OF INSURANCE IN THE FORM AND MINIMUM AMOUNTS REQUIRED. THE GENERAL CONTRACTOR WILL BE RESPONSIBLE TO SECURE CERTIFICATES FROM EACH OF HIS SUB-CONTRACTORS. THE LANDLORD AND CONTRACT OWNER INTENDS TO RELY SOLELY ON THE GENERAL CONTRACTORS INSURANCE FOR ITS PRIMARY INSURANCE PROTECTION.

TYPES OF INSURANCE:	LIMITS:	
GENERAL LIABILITY		
COMMERCIAL GENERAL LIABILITY	GENERAL AGGREGATE	$4,000,000.00
OCCURRENCE	PRODUCTS-COMP/OP AGG.	$2,000,000.00
PER PROJECT	PERSONAL & ADV INJURY	$2,000,000.00
	EACH OCCURRENCE	$2,000,000.00
	PROPERTY DAMAGE	$1,000,000.00
	MED. EXPENSES	$10,000.00
AUTO LIABILITY:		
ANY LIABILITY	COMBINED SINGLE LIMIT	$2,000,000.00
EXCESS LIABILITY:		
UMBRELLA FORM	EACH OCCURRENCE	$2,000,000.00
	AGGREGATE PER PROJECT	$4,000,000.00
WORKER'S COMPENSATION & EMPLOYER'S LIABILITY:		
WC STATUTORY LIMIT	EL EACH ACCIDENT	$2,000,000.00
	EL DISEASE - POLICY LIMIT	$2,000,000.00
	EL DISEASE - EACH EMPLOYEE	$2,000,000.00

CERTIFICATE HOLDERS:
LANDLORD, CONTRACT OWNER, AND ARCHITECT

CONTRACT OWNER:
JEG-VIPER BONNEY LAKE, LLC
2800 SOUTHAMPTON ROAD, PHILADELPHIA PA 19154

LANDLORD:
BOARDMAN TAPPS, LLC
c/o BOARDMAN INVESTMENTS, LLC
ATTN: SHANE JIMENEZ
802 W. BANNOCK STREET, 12TH FLOOR
BOISE, ID 83702

ADDITIONAL INSURED:
PROVIDE ADDITIONAL INSURED ENDORSEMENT NAMING THE CONTRACT OWNER, "JEG-VIPER BONNEY LAKE, LLC, DBA PLANET FITNESS".

THIS COVERAGE SHALL BE PRIMARY AND NON-CONTRIBUTORY PROVIDING COVERAGE FOR ONGOING AND COMPLETED OPERATIONS.

* END OF SECTION

SECTION 0104 COORDINATION

0104.1 SITE CONDITIONS

1.1 ALL CONTRACTORS SHALL VISIT AND EXAMINE THE SITE TO BE THOROUGHLY FAMILIAR WITH ALL EXISTING CONDITIONS AND GROUNDS BEFORE SUBMITTING A BID. THE SUBMISSION OF A BID WILL BE TAKEN AS EVIDENCE THAT SUCH AN EXAMINATION HAS BEEN MADE AND THAT ALL EXISTING CONDITIONS HAVE BEEN CONSIDERED. IGNORANCE OF AN ACCESSIBLE CONDITION OR AVAILABLE INFORMATION OR LACK OF KNOWLEDGE OF PRESENT CONDITIONS WILL NOT EXCUSE THE CONTRACTOR OF RESPONSIBILITY FOR PERFORMANCE OF THE WORK.

0104.2 DIVISIONS OF THE WORK

2.1 ONE CONTRACT WILL BE AWARDED FOR ALL WORK INCLUDING GENERAL CONSTRUCTION, MECHANICAL CONSTRUCTION, PLUMBING CONSTRUCTION AND ELECTRICAL CONSTRUCTION.

2.2 THE SPECIFICATIONS HAVE BEEN WRITTEN WITH ARBITRARY SUB-DIVISIONS FOR CONVENIENCE ONLY. SUCH SUB-DIVISIONS ARE NOT A LIMITATION UPON THE CONTRACTOR TO APPORTION WORK. THE CONTRACTOR MAY ALLOT THE WORK AT HIS OWN DISCRETION REGARDLESS OF THE GROUPING OF THE SPECIFICATIONS. IT SHALL BE HIS RESPONSIBILITY TO SETTLE DEFINITIVELLY WITH HIS SUB-CONTRACTORS THE PORTION OF THE WORK WHICH EACH WILL BE REQUIRED TO DO AND NEITHER THE LANDLORD, CONTRACT OWNER, NOR THE ARCHITECT ASSUMES RESPONSIBILITY FOR ANY JURISDICTION CLAIMED BY ANY OF THE TRADES INVOLVED IN THE WORK.

0104.3 SUPERVISION AND COORDINATION

3.1 IT IS THE GENERAL CONTRACTOR'S RESPONSIBILITY TO COORDINATE THE WORK OF ALL TRADES AND HIS WORK WITH THE WORK OF THE MECHANICAL, PLUMBING AND ELECTRICAL CONTRACTORS TO GIVE ALL LINES, LEVELS AND DIMENSIONS. ALL MAJOR CONTRACTORS SHALL BE SIMILARLY RESPONSIBLE FOR THE WORK OF THEIR TRADES AND SUB-CONTRACTORS. THE GENERAL CONTRACTOR AND MAJOR SUB-CONTRACTORS SHALL PROVIDE FOR THEIR RESPECTIVE WORK FOR THE FOLLOWING:

3.1.1 ACTIVE AND CONTINUOUS JOB SUPERINTENDENCE.

3.1.2 PROJECT ADMINISTRATION AND ASSURED COORDINATION BETWEEN CONTRACTORS.

3.1.3 CHECKING SHOP DRAWINGS PRIOR TO SUBMISSION TO ARCHITECT/ENGINEER APPROVAL.

3.1.4 INSURE COMPLETE COMPLIANCE WITH THE CONTRACT DOCUMENTS.

* END OF SECTION

SECTION 0105 FIELD ENGINEERING

0105.1 DIMENSIONS

1.1 THE CONTRACTOR IS TO SUPPLY ALL SITE ENGINEERING REQUIRED TO PERFORM THIS WORK. ALL DIMENSIONS AND MEASUREMENTS MUST BE VERIFIED AT THE BUILDING AND SITE AND MUST NOT BE SCALED FROM DRAWINGS. IGNORING THIS PROVISION SHALL NOT EXCUSE THE CONTRACTOR FROM THE RESPONSIBILITY OF LOCATING THE WORK PROPERLY ON THE SITE OR IN THE BUILDING OR FOR RESULTING DISCREPANCIES. DIMENSIONS SHOWN ON LARGE SCALE DETAILS TAKE PREFERENCE OVER THOSE OF SMALLER SCALE. IN CASE OF DISCREPANCIES, THE MORE STRINGENT REQUIREMENTS GOVERN.

0105.2 FIELD CONDITIONS

2.1 THE ARCHITECT SHALL BE NOTIFIED IMMEDIATELY UPON DISCLOSURE OF ANY FIELD CONDITION WHICH IS CONTRARY TO THAT SHOWN OR DESCRIBED ON THE DRAWINGS OR MENTIONED HEREIN. NECESSARY ADJUSTMENT SHALL BE APPROVED BY THE ARCHITECT.

0105.3 DOCUMENT DISCREPANCIES OR CONTRADICTIONS

3.1 THE ARCHITECT SHALL BE NOTIFIED IMMEDIATELY UPON DISCOVERY OF A DISCREPANCY IN THE DOCUMENTS. THE FOLLOWING IS THE ORDER WHICH THE ARCHITECT SHALL USE TO RESOLVE THE DISCREPANCY; 1) SPECIFICATIONS, 2) LARGE SCALE DETAILS, 3) SECTIONS AND DETAILS, 4) ELEVATIONS AND PLANS.

3.2 IF CONFLICTS OCCUR IN THE CONTRACT DOCUMENTS THE CONFLICT SHALL BE SUBMITTED TO THE ARCHITECT FOR RESOLUTION. THE FOLLOWING IS THE ORDER OF PRIORITY FOR RESOLVING THE CONFLICT WITHIN THE DOCUMENTS.

3.2.1 THE CONTRACT DOCUMENT IS THE FIRST PRIORITY.

3.2.2 THE GENERAL CONDITIONS ARE THE THIRD PRIORITY.

3.2.3 THE SPECIFICATIONS ARE THE FOURTH PRIORITY.

3.2.4 LARGE SCALE DRAWINGS ARE THE FIFTH PRIORITY.

3.2.5 THE 1/8 SCALE DRAWINGS ARE THE SIXTH PRIORITY.

0105.4 NOTIFICATION

4.1 FAILURE TO NOTIFY THE ARCHITECT OF DISCREPANCIES OR CONTRADICTIONS IN FIELD CONDITIONS OR DRAWINGS SHALL RESULT IN THE CONTRACTOR ASSUMING ALL RESPONSIBILITY FOR THE RESOLUTION OF PROBLEMS ARISING FROM THESE DISCREPANCIES OR CONTRADICTIONS.

* END OF SECTION

SECTION 0106 REGULATORY REQUIREMENTS

0106.1 LOCAL REQUIREMENTS

1.1 **THE TENANT SHALL SUBMIT FOR THE BUILDING, MECHANICAL AND PLUMBING PERMITS AND PAY THEIR COSTS DIRECTLY. THE GENERAL CONTRACTOR SHALL SUBMIT AND PAY FOR THE FIRE PROTECTION SPRINKLER PERMIT, FIRE ALARM PERMIT AND WASHINGTON STATE'S DEPARTMENT OF LABOR & INDUSTRIES ELECTRICAL PERMIT. THE WINNING GENERAL CONTRACTOR SHALL FINALIZE AND OBTAIN ALL PERMITS FROM THE CITY OF BONNEY LAKE WHEN THE OWNER INFORMS THE GENERAL CONTRACTOR THAT THE BUILDING, MECHANICAL AND PLUMBING PERMITS ARE READY FOR ISSUANCE.** NO INFORMATION IN THESE SPECIFICATIONS OR PLANS ARE INTENDED TO CONFLICT OR SUPERSEDE CODES LISTED ABOVE OR LOCAL BUILDING CODES, ORDINANCES, OR REGULATIONS AND IF ANY SUCH INFRINGEMENT OR CONFLICT IS IN EVIDENCE, THE REGULATIONS, CODES, ETC., SHALL TAKE PRECEDENCE AND THE ARCHITECT SHALL BE NOTIFIED IMMEDIATELY OF SUCH DISCREPANCY.

0106.2 STATE CODE REQUIREMENTS

2.1 BONNEY LAKE USES THE 2015 INTERNATIONAL BUILDING CODE W/ AMENDMENTS. THE CONTRACTOR WILL BE RESPONSIBLE FOR THE FINALIZING AND PICKING UP THE BUILDING PERMIT AND SUBMITTING/OBTAINING THE CERTIFICATE OF OCCUPANCY PERMIT. THE ARCHITECT WILL SUPPLY SEALED DRAWINGS TO THE TENANT WHO WILL SUBMIT FOR PERMITS DURING THE BID PHASE (EXCEPT THE FIRE PROTECTION, FIRE ALARM, & ELECTRICAL PERMITS). CONTRACTOR TO SECURE THE APPLICATIONS FOR THE CERTIFICATE OF OCCUPANCY PERMIT; ARCHITECT WILL ASSIST CONTRACTOR AS REQUIRED.

* END OF SECTION

SECTION 0110 SPECIAL CONDITIONS

0110.1 TIME LIMITATIONS

1.1 THE FINAL TIME LIMITATIONS ARE TO BE ESTABLISHED BY THE OWNER AND AGREED TO BY THE GENERAL CONTRACTOR AND OWNER. ALL WORK MUST BE COMPLETE FOR SUBSTANTIAL OCCUPANCY WITHIN THE SPECIFIED TIME IN THE CONTRACT.

1.2 ALL OVERTIME REQUIRED TO COMPLETE THE WORK WITHIN THE SCHEDULE SHALL BE INCLUDED IN THE BID. NO EXTRAS WILL BE PAID FOR OVERTIME WORK TO MEET THE SCHEDULE.

1.3 SPECIAL PERMISSION FROM THE OWNER MUST BE RECEIVED PRIOR TO OBTAINING ACCESS TO THE SITE AT OTHER THAN NORMAL WORKING HOURS.

1.4 EXTENSION FOR COMPLETION OF WORK WILL BE GRANTED BY THE OWNER AND ARCHITECT WHEN DELAYS IN THE WORK ARE CAUSED BY THE OWNER, ARCHITECT, WEATHER, UNAVAILABILITY OF MATERIAL, ETC., WHEN DEEMED JUSTIFIABLE. SUCH EXTENSIONS MUST BE IN WRITING AND FILED WITH THE ARCHITECT WITHIN FIVE (5) WORKING DAYS FROM THE DATE OF THE DETERMINED CAUSE OF THE DELAY OF THE WORK.

0110.2 SITE LIMITATION

2.1 ALL CONSTRUCTION MATERIAL, EQUIPMENT, DEBRIS, TRAILERS, ETC. MUST BE KEPT WITHIN THE SITE AT ALL TIMES WHILE UNDER CONSTRUCTION.

2.2 WORK EXECUTED ON ADJACENT ROADS MUST BE LIMITED TO OFF-PEAK PERIODS OR IN SUCH A MANNER AS NOT TO DISTURB NORMAL TRAFFIC PATTERNS ON ADJACENT ROAD.

2.3 WHILE WORK IS EXECUTED ON THE ADJACENT ROADS AND AT THE PERIMETER OF THE SITE, PROPER BARRICADES SHALL BE ERECTED TO PROTECT THE PUBLIC FROM THE DANGERS OF THE SITE. PROPER PROTECTIVE BARRICADES SHALL REMAIN IN PLACE UNTIL SUCH TIME AS THE SITE IS DEEMED SAFE WITHOUT THE BARRICADES.

2.4 A CONSTRUCTION SIGN MAY BE ERECTED BY THE CONTRACTOR DISPLAYING THE NAMES OF THE CONTRACTORS AND OTHER PARTIES OF THE PROJECT. NO OTHER SIGNS WILL BE PERMITTED ON THE SITE EXCEPT SMALL DELIVERY SIGNS FOR THE GENERAL CONTRACTOR.

2.5 TREE PROTECTION:

2.5.1 CONTRACTORS SHALL NOT BE PERMITTED TO REMOVE OR DAMAGE ANY EXISTING TREE OR GROUPS OF TREES IN THE FIELD. CONSTRUCTION MATERIALS, ALTERATION OF EXISTING GRADES AND ELEVATIONS, MOVEMENT OF CONSTRUCTION EQUIPMENT, OR ANY OTHER ACTIVITY SHALL NOT BE PERMITTED WITHIN THE "DRIP-LINE" AREAS OF EXISTING TREES. THE "DRIP-LINE" OF EXISTING TREES SHALL MEAN THE GROUND AREA, DEFINED BY THE SPREAD OF THE BRANCHES AND VEGETATION, EXTENDED TO THE GROUND.

2.5.2 TRENCHING FOR UNDERGROUND UTILITIES, FOOTINGS AND OTHER CONSTRUCTION WORK WITHIN THE DRIP-LINE OF EXISTING TREES SHALL NOT BE PERMITTED WITHOUT PROPER AUTHORIZATION.

2.5.3 ANY AND ALL CONTRACTORS RESPONSIBLE FOR THE DAMAGE OR REMOVAL OF EXISTING TREES SHALL BE HELD RESPONSIBLE FOR ALL COSTS ASSOCIATED WITH REPLACING THE TREE OR TREES IN KIND. REPLACEMENT COST SHALL INCLUDE THE FURNISHING, INSTALLATION, AND A ONE YEAR GUARANTEE OF SAID TREES. TREES DAMAGED OR DESTROYED UP TO 12" IN CALIPER SHALL BE REPLACED IN KIND; TREES LARGER THAN 12" IN CALIPER SHALL BE REPLACED WITH MULTIPLE TREES HAVING A TOTAL CALIPER EQUAL TO THAT OF THE DAMAGED OR DESTROYED TREE, WITH A MINIMUM OF 6" IN CALIPER (I.E. 24" CALIPER TREE DESTROYED SHALL BE REPLACE WITH A MINIMUM OF FOUR 6" CALIPER TREES.)

0110.3 COORDINATION

3.1 THE CONTRACTOR IS TO SCHEDULE AND COORDINATE ALL OF THE WORK FOR THIS PROJECT. THIS SHALL INCLUDE, BUT NOT BE LIMITED TO, THE FOLLOWING:

3.1.1 ALL WORK UNDER THE JURISDICTION OF THE ELECTRICAL CONTRACTOR.

3.1.2 ALL WORK UNDER THE JURISDICTION OF THE PLUMBING CONTRACTOR.

3.1.3 ALL WORK UNDER THE JURISDICTION OF THE MECHANICAL CONTRACTOR.

3.1.4 ALL WORK UNDER THE JURISDICTION OF THE SPRINKLER AND/OR FIRE PROTECTION CONTRACTOR.

3.1.5 ALL WORK UNDER THE JURISDICTION OF THE UTILITY COMPANIES: WATER, ELECTRIC, GAS, & TELEPHONE.

3.1.6 WORK UNDER THE JURISDICTION OF THE OWNER'S DIRECTLY HIRED CONTRACTORS.

3.1.7 OWNER SUPPLIED EQUIPMENT AND MATERIALS.

3.1.8 PREPARATION, SUBMISSION, REVIEW, AND COORDINATION OF ALL SHOP DRAWINGS, CATALOG CUTS, AND SAMPLES.

0110.4 SHOP DRAWINGS, DATA SUBMITTALS & SAMPLES

4.1 SHOP DRAWINGS AND/OR DATA SUBMITTALS TO BE PROVIDED TO THE ARCHITECT FOR THE FOLLOWING ITEMS:

4.1.1 MILLWORK & CASEWORK
4.1.2 WINDOWS
4.1.3 DOORS, FRAMES & HARDWARE.
4.1.4 PLUMBING FIXTURES & TOILET ROOM ACCESSORIES AND PARTITIONS
4.1.5 ELECTRICAL GEAR
4.1.6 LIGHT FIXTURES
4.1.7 STRUCTURAL STEEL

4.2 SUBMITTAL FORMAT

4.2.1 WHEN SHOP DRAWINGS & DATA SUBMITTALS ARE SUBMITTED IN HARD COPY FORMAT, SUBMIT SIX (6) COPIES FOR REVIEW. IF APPLICABLE, THE ARCHITECT WILL FORWARD SUBMITTALS TO THE RESPECTIVE CONSULTANTS FOR REVIEW OF THEIR SCOPE OF THE WORK. THE CONSULTANT WILL REVIEW AND MAKE NOTATIONS ON ALL COPIES. THE CONSULTANT WILL RETAIN ONE (1) MARKED UP COPY FOR HIS RECORDS AND RETURN THE REMAINING ANNOTATED COPIES TO THE ARCHITECT. THE ARCHITECT WILL REVIEW AND MAKE NOTATIONS ON ALL COPIES. THE ARCHITECT WILL RETAIN ONE (1) MARKED UP COPY FOR HIS RECORDS AND WILL RETURN THE REMAINING ANNOTATED COPIES TO THE CONTRACTOR. PROVIDE AMPLE SPACE ON THE RIGHT-HAND MARGIN OF EACH DRAWING FOR STAMP.

4.2.2 WHEN SHOP DRAWINGS & DATA SUBMITTALS ARE IN ELECTRONIC FORMAT, SUBMIT TO THE ARCHITECT IN PDF FILE FORMAT. INCLUDE APPROPRIATE TRANSMITTAL ALONG WITH THE ELECTRONIC FILE. THE TRANSMITTAL SHALL INDICATE THE TRADE DIVISION OF WORK INTO WHICH THE SUBMISSION IS CLASSIFIED, PER CSI MASTERFORMAT 1995 (16 DIVISIONS), A BRIEF WRITTEN DESCRIPTION OF THE SUBMISSION CONTENTS, INCLUDING DRAWINGS INCLUDED, TOTAL PAGES, SUBMISSION NUMBER AND REVISION NUMBER, IF APPLICABLE. THE ARCHITECT WILL REVIEW AND MAKE NOTATIONS. THE ARCHITECT WILL ELECTRONICALLY RETURN THE MARKED-UP SUBMITTAL TO THE CONTRACTOR.

4.3 FINISH SAMPLES TO BE PROVIDED FOR THE FOLLOWING ITEMS:

4.3.1 INTERIOR PAINT COLOR FINISHES

4.4 FORMAT: SUBMIT AT LEAST THREE (3) SAMPLES EACH. ARCHITECT TO RETURN TWO (2) TO CONTRACTOR.

0110.5 JOB MEETINGS

5.1 JOB MEETINGS WILL BE HELD AT THE SITE AT A TIME DESIGNATED AT THE OWNER'S DISCRETION. IT IS REQUIRED THAT A REPRESENTATIVE OF EACH TRADE WORKING ON THE JOB ATTEND EACH MEETING AS WELL AS THE CONTRACTOR'S SUPERINTENDENT AND PROJECT MANAGER TO CONVEY INFORMATION OF WORK SCHEDULE, MATERIAL DELIVERIES, NEW CONSTRUCTION PROBLEMS UNCOVERED AS THE WORK PROGRESSES.

0110.6 PERMITS

6.1 SEE SECTION 0106.1 AND 0106.2

0110.7 MINOR CHANGES

7.1 MINOR CHANGES IN THE LOCATIONS OF EQUIPMENT, PIPES, RISERS, VALVES, PARTITIONS, ACCESS PANELS, ETC., FROM THOSE INDICATED ON THE DRAWINGS DUE TO FIELD CONDITIONS SHALL BE MADE IF SO DIRECTED BY THE ARCHITECT AND SUCH CHANGES SHALL BE ACCOMMODATED WITHOUT EXTRA COST TO THE OWNER.

0110.8 TEMPORARY FACILITIES

8.1 THE GENERAL CONTRACTOR SHALL PROVIDE ADEQUATE STORAGE FOR MATERIALS AND TOOLS AND EQUIPMENT AT ALL TIMES. UNLESS PRIOR APPROVAL IS GRANTED BY THE CONTRACT OWNER, THE GENERAL CONTRACTOR MAY NOT USE PORTIONS OF THE BUILDING FOR FIELD OFFICE, STORAGE OF MATERIAL, TOILET ROOMS, ETC. IF NECESSARY, JOB TRAILER, STORAGE TRAILERS, AND TEMPORARY TOILETS SHALL BE PROVIDED BY THE CONTRACTOR IN LOCATIONS APPROVED BY THE BUILDING LANDLORD.

0110.9 TEMPORARY LIGHTING

9.1 THE ELECTRICAL CONTRACTOR SHALL PROVIDE ALL TEMPORARY LIGHTING AS REQUIRED IN THE EXISTING BUILDING TO EXPEDITE THE WORK AND MAINTAIN A SAFE WORK ENVIRONMENT.

9.2 ALL TEMPORARY FIXTURES NOT SCHEDULED FOR REUSE IN BUILDING SHALL BE REMOVED FROM THE PROJECT PRIOR TO COMPLETION OF THE PROJECT.

0110.10 TEMPORARY TOILET FACILITIES

10.1 CONTRACTOR SHALL PROVIDE TEMPORARY TOILET FACILITIES ON SITE.

0110.11 CODES AND REGULATIONS

11.1 IF THE CONTRACTOR ASCERTAINS AT ANYTIME THAT ANY REQUIREMENT OF THE CONTRACT IS AT VARIANCE WITH APPLICABLE LAWS, ORDINANCES, REGULATIONS OR BUILDING CODE REQUIREMENTS, HE SHALL PROMPTLY NOTIFY THE ARCHITECT, AND ANY NECESSARY ADJUSTMENTS OF THE CONTRACT SHALL BE MADE AS PROVIDED FOR UNDER "CHANGES OF WORK".

0110.12 STANDARDS

12.1 ANY PRODUCT, MATERIAL, OR EQUIPMENT SPECIFIED BY REFERENCE TO THE NUMBER, SYMBOL, OR TITLE OR SPECIFIC STANDARD, SUCH AS COMMERCIAL STANDARD, FEDERAL SPECIFICATION, TRADE ASSOCIATION STANDARD, OR OTHER SIMILAR OR RELATED CONSTRUCTION INDUSTRY STANDARD, SHALL COMPLY WITH REQUIREMENTS IN THE LATEST REVISIONS THEREOF AND ANY AMENDMENT OR SUPPLEMENT THERETO IN EFFECT ON THE DATE OF THE SIGNING OF THE CONTRACT OF THIS PROJECT, EXCEPT AS LIMITED TO TYPE, CLASS OR GRADE, OR MODIFIED IN SUCH REFERENCE.

12.2 THE STANDARDS REFERRED TO SHALL HAVE FULL FORCE AND EFFECT AS THOUGH PRINTED HEREIN. THESE STANDARDS ARE NOT FURNISHED TO THE CONTRACTORS, FOR THE REASON THAT THEY ARE ASSUMED EITHER TO BE FAMILIAR WITH THE REQUIREMENTS OR WILL SECURE COPIES OF THE REFERENCED STANDARDS PRIOR TO BIDDING AND/OR DESIGNING SAID WORK.

12.3 FOR ANY PRODUCTS, MATERIAL, OR EQUIPMENT SPECIFIED BY REFERENCE TO STANDARDS, THE CONTRACTOR SHALL FURNISH SATISFACTORY EVIDENCE OF THE COMPLIANCE WITH THE PARTICULAR STANDARD SPECIFICATIONS.

12.4 APPLICABLE STANDARDS:

12.4.1 ACI = AMERICAN CONCRETE INSTITUTE, BOX 19150, REDFORD STATION, DETROIT, MICHIGAN 48129.

12.4.2 AISC = AMERICAN INSTITUTE OF STEEL CONSTRUCTION, INC., 1221 AVENUE OF THE AMERICAS, NEW YORK, NEW YORK 10020.

12.4.3 ANSI = AMERICAN NATIONAL STANDARDS INSTITUTE SUCCESSOR TO USASI AND ASA, 1430 BROADWAY, NEW YORK, NEW YORK 10018.

12.4.4 ASTM = AMERICAN SOCIETY FOR TESTING AND MATERIALS, 1916 RACE STREET, PHILADELPHIA, PENNSYLVANIA 19103.

12.4.5 AWS = AMERICAN WELDING SOCIETY, INC., 2501 N.W. 7TH STREET, MIAMI, FLORIDA 33125.

12.4.6 AWWA = AMERICAN WATER WORKS ASSOCIATION, INC., 6666 WEST QUINCY AVENUE, DENVER, COLORADO 80235.

12.4.7 CRSI = CONCRETE REINFORCING STEEL INSTITUTE, 228 NORTH LASALLE STREET, CHICAGO, ILLINOIS 60610.

12.4.8 CS = COMMERCIAL STANDARD OF NBS, U. S. DEPARTMENT OF COMMERCE, GOVERNMENT PRINTING OFFICE, WASHINGTON, D. C. 20402.

12.4.9 FGMA = FLAT GLASS MARKETING ASSOCIATION, 3310 HARRISON, TOPEKA, KANSAS 66611.

12.4.10 NAAMM = NATIONAL ASSOCIATION OF ARCHITECTURAL METAL MANUFACTURERS, 1033 SOUTH BOULEVARD, OAK PARK, ILLINOIS 60302.

12.4.11 NEC = NATIONAL ELECTRICAL CODE SEE NFPA.

12.4.12 NEMA = NATIONAL ELECTRICAL MANUFACTURERS ASSOCIATION, 155 EAST 44TH STREET, NEW YORK, NEW YORK 10017.

12.4.13 NFPA = NATIONAL FIRE PROTECTION ASSOCIATION, 470 ATLANTIC AVENUE, BOSTON, MASSACHUSETTS 02210.

12.4.14 SDI = STEEL DECK INSTITUTE, 135 ADDISON AVENUE, ELMHURST, ILLINOIS 60125.

12.4.15 SSPC = STEEL STRUCTURES PAINTING COUNCIL, 4400 5TH AVENUE, PITTSBURGH, PENNSYLVANIA 15213.

12.4.16 TCA = TILE COUNCIL OF AMERICA, INC., P. O. BOX 326, PRINCETON, NEW JERSEY 08540.

12.4.17 UL = UNDERWRITERS' LABORATORIES, INC., 207 EAST OHIO STREET, CHICAGO, ILLINOIS 60611.

12.4.18 FED SPECS AND FED STANDARDS: SPECIFICATIONS SALES FRI, BLDG. 197, WASHINGTON NAVY YARD, GENERAL SERVICES ADMINISTRATION, WASHINGTON, D. C. 20407.

0110.13 SPECIFICATION BY NAME BRAND

13.1 WHERE MATERIALS, EQUIPMENT, APPARATUS OR OTHER PRODUCTS ARE SPECIFIED BY MANUFACTURER, BRAND NAME, TYPE OR CATALOG NUMBER, SUCH DESIGNATION IS TO ESTABLISH STANDARDS OF DESIRED QUALITY AND STYLE EXCEPT FOR THE LIGHTING FIXTURES, WALL FINISHES & FLOOR FINISHES. MATERIALS SO SPECIFIED SHALL BE FURNISHED UNDER THE CONTRACT UNLESS A PROPOSED MATERIAL SUBSTITUTION IS FOUND TO BE OF EQUAL QUALITY AND STYLE AND THE CHANGE IS APPROVED IN WRITING BY THE ARCHITECT. WHERE TWO OR MORE MANUFACTURERS ARE LISTED, CHOICE SHALL BE OPTIONAL WITH THE CONTRACTOR, PROVIDED THAT QUALITY AND STYLE SPECIFICATIONS ARE MET.

0110.14 INSPECTION AND TESTING

14.1 MATERIALS AND WORKMANSHIP MAY BE SUBJECT TO INSPECTION AND TESTING IN ACCORDANCE WITH 2015 IBC SECTION 1704, SPECIAL INSPECTIONS BY THE OWNER'S TESTING ENGINEER DURING CONSTRUCTION AND AT ALL OTHER TIMES AND PLACES, TO THE EXTENT PRACTICABLE. THE CONTRACTOR SHALL GIVE FULL COOPERATION AND ACCESS TO THE WORK TO THE OWNER'S TESTING ENGINEER. CONSTRUCTION SYSTEMS SUBJECT TO TESTING SHALL INCLUDE, BUT ARE NOT LIMITED TO:

14.1.1 STEEL CONNECTIONS (WELDING, HIGH STRENGTH BOLTS)
14.1.2 FIRE RESISTIVE MATERIALS & ASSEMBLIES
14.1.3 SMOKE CONTROL SYSTEMS
14.1.4 SPECIAL CONDITIONS AS REQUIRED BY CODE OFFICIAL

14.2 FOR ITS OWN INTEREST, AT ITS DISCRETION, AT ITS OWN EXPENSE, AND WITHOUT IN ANY WAY REDUCING THE CONTRACTOR'S FULL AND TOTAL RESPONSIBILITIES FOR CONTROLLING THE INSTALLED QUALITY OF ALL MATERIALS, PRODUCTS, OR EQUIPMENT, THE OWNER MAY ARRANGE FOR SPOT, OCCASIONAL, RANDOM AND ROUTINE TESTING OF VARIOUS MATERIALS, PRODUCTS, OR EQUIPMENT, IN ACCORDANCE WITH GENERALLY ACCEPTED STANDARDS FOR THE TRADE INVOLVED.

14.2.1 IF THE MATERIAL, PRODUCT, OR EQUIPMENT FAILS TO COMPLY WITH THE CONTRACT REQUIREMENTS, THE CONTRACTOR SHALL PAY FOR THE COSTS OF ALL EXAMINATION AND TESTING, AND SHALL REMOVE AND REPLACE ALL SIMILAR MATERIALS, PRODUCTS OR EQUIPMENT WITH APPROVED MATERIALS AT NO EXPENSE TO THE OWNER.

14.2.2 IF THE EXAMINATION AND TEST ESTABLISH THE SUITABILITY AND COMPLIANCE OF THE MATERIAL, PRODUCT OR EQUIPMENT, THE OWNER SHALL PAY FOR THE COSTS OF EXAMINATIONS AND TESTING, AND THE COST OF ANY WORK NECESSARY TO REPAIR OR RETURN TO WORKING CONDITION THE TESTED MATERIAL, PRODUCT, OR EQUIPMENT.

0110.15 MANUFACTURER'S DIRECTIONS

15.1 THE CONTRACTOR SHALL INSTALL, APPLY, CONNECT, ERECT AND USE ALL MANUFACTURED MATERIALS, PRODUCTS, AND EQUIPMENT IN ACCORDANCE WITH THE MANUFACTURER'S PRINTED INSTRUCTIONS.

0110.16 MATERIALS, SERVICES AND FACILITIES

16.1 IT IS UNDERSTOOD THAT, EXCEPT AS OTHERWISE SPECIFICALLY STATED ON THE CONTRACT DOCUMENTS, THE CONTRACTOR SHALL PROVIDE AND PAY FOR ALL MATERIALS, LABOR, TOOLS, EQUIPMENT, OFF-SITE WATER, POWER AND LIGHT, TRANSPORTATION, SUPERINTENDENCE, TEMPORARY CONSTRUCTION OF EVERY NATURE, AND ALL OTHER SERVICES, FACILITIES, TAXES, ROYALTIES, AND FEES OF EVERY NATURE WHATSOEVER NECESSARY TO EXECUTE, COMPLETE AND DELIVER THE WORK.

16.2 ANY WORK NECESSARY TO BE PERFORMED AFTER REGULAR WORKING HOURS, ON SUNDAYS, OR LEGAL HOLIDAYS, SHALL BE PERFORMED WITHOUT ADDITIONAL EXPENSE TO THE OWNER. OVERTIME WORK BEYOND THE CONTRACT AMOUNT MUST BE APPROVED BY THE OWNER IN WRITING.

0110.17 QUANTITIES OF ESTIMATE

17.1 WHEREVER THE ESTIMATED QUANTITIES OF WORK TO BE DONE AND MATERIALS TO BE FURNISHED UNDER THIS CONTRACT ARE SHOWN IN ANY OF THE DOCUMENTS, THEY ARE GIVEN AS GUIDES IN PREPARING A TOTAL CONSTRUCTION PRICE. THIS IN NO WAY RELIEVES THE CONTRACTOR FROM HIS RESPONSIBILITY TO ESTABLISH HIS OWN ACCOUNTING OF QUANTITIES AND COST OF THE WORK.

0110.18 CLEANING AND FINAL CLEAN-UP

18.1 THE CONTRACTOR SHALL HAVE THE RESPONSIBILITY FOR KEEPING THE PREMISES FREE AT ALL TIMES FROM ACCUMULATION OF WASTE MATERIALS, DEBRIS, TOOLS AND EQUIPMENT.

18.2 THE CONTRACTOR SHALL EXECUTE THE FOLLOWING AS "FINAL CLEAN-UP":

18.2.1 REMOVE ALL DEBRIS AND RUBBISH FROM THE SITE AND BUILDING.

18.2.2 REMOVE ALL TOOLS, SURPLUS MATERIAL, TEMPORARY BUILDING MATERIAL, TRAILERS AND TEMPORARY BUILDINGS.

18.2.3 REMOVE PUTTY OR GLAZING STAINS FROM GLASS AND MIRRORS; WASH, POLISH, INSIDE AND OUTSIDE. CLEAN ALL WINDOWS, MIRRORS, ETC.

18.2.4 REMOVE MARKS, UNDESIRABLE STAINS, FINGERPRINTS, OTHER SOIL, DUST AND DIRT FROM PAINTED, DECORATED OR STAINED WOODWORK, WALL SURFACES, METAL, DECORATIVE SIGNAGE, ACOUSTICAL TILE AND EQUIPMENT SURFACES.

18.2.5 REMOVE SPOTS, PAINT, SOIL FROM RESILIENT, GLAZED, AND UNGLAZED MASONRY AND CERAMIC FLOORING AND WALL WORK.

18.2.6 REMOVE TEMPORARY FLOOR PROTECTION; CLEAN, WAX OR OTHERWISE TREAT AS DIRECTED, POLISH ALL FINISHED FLOORS, EXCEPT PAINTED FLOORS.

18.2.7 CLEAN EXTERIOR AND INTERIOR METAL SURFACES, INCLUDING DOORS AND WINDOW FRAMES AND HARDWARE OF OIL, STAINS, DUST, DIRT, PAINT AND THE LIKE; POLISH, LEAVE WITHOUT FINGERPRINTS, BLEMISHES, ETC.

18.2.8 G.C. TO SUPPLY ADDITIONAL DUMPSTERS AT THE END OF THE JOB FOR DISPOSAL OF OWNER SUPPLIED EQUIPMENT AND MATERIAL BOXES AND DEBRIS. SUPPLIED DUMPSTERS TO EQUAL 150 YARDS.

0110.19 CONSTRUCTION SCHEDULE

19.1 THE CONTRACTOR IS RESPONSIBLE FOR SCHEDULING OF THE WORK AND COORDINATION OF WORK. TO AID THE CONTRACTOR, LANDLORD, OWNER, ARCHITECT AND SUBCONTRACTORS, THE CONTRACTOR SHALL PREPARE A BAR TYPE CONSTRUCTION SCHEDULE SHOWING ALL PHASES OF THE WORK. THE SCHEDULE SHALL BE PREPARED AND SUBMITTED FOR REVIEW WITHIN TWO (2) WEEKS FROM NOTICE TO PROCEED AND SHALL BE UPDATED BI-WEEKLY OR AS REQUIRED.

19.2 THE CONTRACTOR SHALL COMPLETE THE CONSTRUCTION OF THE PROJECT & OBTAIN A CERTIFICATE OF OCCUPANCY BY END OF BUSINESS DAY ELEVEN (11) WEEKS AFTER AUTHORIZATION TO PROCESS IS GIVEN BY THE CONTRACT OWNER. THE OFFICIAL START DATE AND FINAL DUE DATE SHALL BE AGREED TO BY THE GENERAL CONTRACTOR & CONTRACT OWNER.

0110.20 SCHEDULE OF VALUES

20.1 THE CONTRACTOR SHALL SUBMIT A SCHEDULE OF VALUES EQUALING THE BID TOTAL PLUS CHANGE ORDERS, ACCEPTED ALTERNATES, ETC. THE SCHEDULE SHALL BE MADE OF AT LEAST 16 LINE ITEMS, PARALLELING THE SPECIFICATIONS OR TRADE DIVISIONS AS OUTLINED IN CSI MASTERFORMAT 1995 AS WELL AS INDICATE A LINE ITEM FOR EACH CHANGE ORDER AND ALTERNATE. THE SCHEDULE MUST BE SUBMITTED FOR REVIEW TWO (2) WEEKS PRIOR TO SUBMITTING A CERTIFICATE FOR PAYMENT. REVISIONS MAY BE REQUIRED AND MUST BE EXECUTED AND APPROVED PRIOR TO THE ARCHITECT PROCESSING THE FIRST CERTIFICATE FOR PAYMENT.

0110.21 RECORD DRAWINGS AND MANUALS

21.1 AT THE COMPLETION OF THE WORK, THE CONTRACTOR SHALL PREPARE RECORD DRAWINGS OF THE WORK. COPIES OF THE CONTRACT DRAWINGS WILL BE SUPPLIED TO THE CONTRACTOR WHEREON THE CONTRACTOR AND HIS SUBCONTRACTORS SHALL NOTE ANY AND ALL DEVIATIONS OF THE WORK FROM THE CONTRACT DRAWINGS. TWO COPIES OF THESE DRAWINGS SHALL BE SUBMITTED TO THE LANDLORD, ONE COPY OF THESE DRAWINGS SHALL BE SUBMITTED TO THE CONTRACT OWNER, AND ONE COPY OF THESE DRAWINGS SHALL BE SUBMITTED TO THE ARCHITECT.

21.2 ALL OPERATIONS AND MAINTENANCE MANUALS SHALL BE BOUND AND TURNED OVER TO THE OWNER. THREE (3) COPIES SHALL BE REQUIRED.

21.3 ITEMS 1 AND 2 LISTED ABOVE SHALL BE SUBMITTED AT SUBSTANTIAL COMPLETION OF THE WORK AND PRIOR TO FINAL PAYMENT.

0110.22 GUARANTEE

22.1 THE CONTRACTOR SHALL SUBMIT HIS GUARANTEE OF THE WORK IN WRITING TO THE OWNER. ALL OTHER GUARANTEES FROM SUBCONTRACTORS AND SUPPLIERS SHALL BE BOUND WITH THE CONTRACTOR'S GUARANTEE AND SUBMITTED AT SUBSTANTIAL COMPLETION OF THE WORK AND PRIOR TO FINAL PAYMENT.

0110.23 TRASH AND DEBRIS REMOVAL

23.1. THE GENERAL CONTRACTOR SHALL SECURE AND PAY FOR A DUMPSTER TO RECEIVE ALL THE CONSTRUCTION TRASH AND DEBRIS. THE SITE MUST BE "PICKED" OR RAKED DAILY. NO TRASH IS TO BE STACKED OR PILED ON THE SITE. ALL DEBRIS AND TRASH MUST BE STORED ON SITE IN DUMPSTERS OR SOME OTHER FORM OF TRASH CONTAINER.

0110.24 ADD ALTERNATES GENERAL REQUIREMENTS

24.1 PERFORM ALL MODIFICATION TO WORK, INCLUDING OMISSIONS AND/OR ADDITIONS TO ADJACENT OR CONTIGUOUS WORK WHICH ARE MADE NECESSARY BY REASON OF ACCEPTANCE OF THE ADD ALTERNATES. FURNISH ALL LABOR, MATERIAL, EQUIPMENT AND APPLIANCES NECESSARY TO COMPLETE THE ADD ALTERNATE WORK AS SHOWN ON THE DRAWINGS AND SPECIFIED HEREIN.

24.2 THE OWNER RESERVES THE RIGHT TO ACCEPT OR REJECT ANY OR ALL OF THE ADD ALTERNATES LISTED AT ANYTIME WITHIN A PERIOD OF THIRTY (30) DAYS (CONSECUTIVE CALENDAR DAYS) FROM THE DATE OF RECEIPT OF THE ADD ALTERNATE PROPOSAL FROM THE GENERAL CONTRACTOR. ADD ALTERNATES, WHEN ACCEPTED, SHALL BECOME PART OF THE CONTRACT AGREEMENT BETWEEN OWNER AND CONTRACTOR, SUBJECT TO ALL THE REQUIREMENTS OF THESE SPECIFICATIONS THEREOF AND THE CONTRACT DOCUMENTS.

24.3 ADD ALTERNATES LISTED HEREUNDER ARE ADDITIONS TO THE LUMP SUM BASE BID AND SHALL CONTAIN CONTRACTOR'S OVERHEAD AND PROFIT FOR THAT SPECIFIC WORK.

24.3.1 EACH BIDDER SHALL STATE AS A SEPARATE LINE ITEM ON THEIR BID SUBMISSION FORM THE AMOUNT TO BE ADDED TO THE LUMP SUM BASE BID FOR EACH RESPECTIVE ADD ALTERNATE.

24.4 ADD ALTERNATES:

24.4.1 BASE BID: G.C. DOES NOT OBTAIN & CARRY A PERFORMANCE AND PAYMENT BOND FOR THE JOB.

ADD ALTERNATE #1: G.C. SHALL OBTAIN & CARRY A PERFORMANCE AND PAYMENT BOND EQUAL TO OR GREATER THAN ONE HUNDRED PERCENT (100%) OF THE AMOUNT OF THE CONSTRUCTION BID VALUE.

0110.25 PARTIAL RELEASE OF LIENS

25.1 PRIOR TO ACCEPTANCE OF ANY INVOICE FROM A PRIME CONTRACTOR, THE CONSTRUCTION MANAGER IS TO MAKE SURE THE PRIME CONTRACTORS HAVE INCLUDED A FULLY EXECUTED PARTIAL RELEASE OF LIENS, AS PREPARED BY THE OWNER. SEE EXHIBIT 'A' OF THE BID SUBMISSION PACKET FOR A COPY.

0110.26 FINAL RELEASE OF LIENS

26.1 UPON COMPLETION OF ALL WORK AND PRIOR TO RECEIPT OF FINAL PAYMENT, THE CONSTRUCTION MANAGER SHALL HAVE ALL PRIME CONTRACTORS EXECUTE A FULL RELEASE OF LIENS TO THE OWNER, RECORDED AT THE LOCAL COURTHOUSE. SEE EXHIBIT 'B' OF THE BID SUBMISSION PACKET FOR A COPY.

* END OF SECTION

1 GENERAL CONDITIONS SPECIFICATION

Y:\Planet Fitness_JEG Viper_Bonney Lake WA_CD&CA_2017-0105\Drawings\Rev #2\A15 SPEC.dwg

PROPOSED RENOVATION FOR:
PLANET FITNESS
19516 STATE ROUTE 410E
BONNEY LAKE, WASHINGTON 98391

MICHAEL J. PILKO, ARCHITECT
860 FIRST AVE, SUITE 9A
KING OF PRUSSIA, PA 19406
484-928-0650

10965 REGISTERED ARCHITECT
MICHAEL J. PILKO
STATE OF WASHINGTON

RHJ ASSOCIATES, P.C.
PROJECT MANAGEMENT
860 1ST AVE, SUITE 9A
KING OF PRUSSIA, PA 19406
610 337 4555
www.rhjassoc.com

DATE: 5/19/2017

REVISIONS

A.15

2017-0105

STRUCTURAL NOTES

GENERAL REQUIREMENTS

BUILDING CODE & REFERENCE STANDARDS: The "International Building Code" (IBC), 2015 Edition, as adopted and modified by the City of Bonney Lake, governs the design and construction of this project. Reference to a specific section in the Code does not relieve the contractor from compliance with the entire materials reference standards noted below. The latest edition of the materials reference standards shall be used.

SCOPE OF STRUCTURAL WORK: Design structural support of new RTU mechanical units, fans, soffits, and exhaust fan units.

DEFINITIONS: The following definitions apply to these general notes:

- "Structural Engineer of Record" (EOR) - The structural Engineer who is legally responsible for stamping & signing the structural documents for the project. The EOR is responsible for the design of the Primary Structural System.
- "Specialty Structural Engineer" (SSE) - A licensed professional Engineer, not the EOR, who performs specialty structural engineering services necessary to complete the structure, who has experience and training in the specific specialty. The General Contractor, subcontractor, or supplier who is responsible for the design, fabrication and installation of specialty-engineered elements shall retain the SSE. Submittals shall be stamped and signed by the SSE shall be completed by or under the direct supervision of the SSE with a PE or SE license issued by the State of Washington.
- "Deferred Submittals - Deferred Submittal is engineering work to be designed-by-others or bidder-designed.

NOTE PRIORITIES: Notes on the individual drawings shall govern over these general notes.

SPECIFICATIONS: Refer to the contract specifications for information in addition to that contained in these notes and the structural drawings.

STRUCTURAL DETAILS: The structural drawings are intended to show the general character and extent of the project and are not intended to show all details of the work.

ARCHITECTURAL DRAWINGS: Refer to the Architectural drawings for information including, but not limited to: dimensions, elevations, slopes, door and window openings, non-bearing walls, curtain walls, curbs, drains, depressions, railings, waterproofing, finishes and other nonstructural items.

STRUCTURAL RESPONSIBILITIES: The EOR is responsible for the strength and stability of the Primary Structure in its completed state.

CONTRACTOR RESPONSIBILITIES: The contractor is responsible for the means and methods of construction and all job related safety standards such as OSHA and WSHA. The contractor is responsible for the strength and stability of the structure during construction and shall provide temporary shoring, bracing and other elements required to maintain stability until the structure is completed. It is the contractor's responsibility to be familiar with the work required in the construction documents and the requirements for executing it properly.

The contractor shall submit plans showing the location, weight, size and anchorage of all hangers supporting all mechanical, electrical, plumbing or sprinkler loads in excess of 400 pounds. All roof-mounted equipment shall be included on these plans and shall show the weights, sizes, mounting/attachment details, and locations. Submit plans to the Engineer for review prior to installation.

DISCREPANCIES: In case of discrepancies between these general notes, the contract drawings and specifications, and/or reference standards, the Engineer shall determine which shall govern. Discrepancies shall be brought to the attention of the Engineer before proceeding with the work. Accordingly, any conflict in or between the Contract Documents shall not be a basis for adjustment in the Contract Price.

SITE VERIFICATION: The contractor shall verify all dimensions and conditions at the site prior to fabrication and/or construction. Conflicts between the drawings and actual site conditions shall be brought to the attention of the Engineer before proceeding with the work. All underground utilities shall be determined by the Contractor prior to excavation or drilling.

DESIGN CRITERIA

CONSTRUCTION LOADS: Loads on the structure during construction shall not exceed the design loads or the capacity of the partially completed construction.

SNOW LOAD: The roof snow load is determine by using Chapter 7 of ASCE 7-10 in accordance with IBC Section 1608 and with the following factors:

Minimum roof design load 25 psf without drift
Ground Snow Load, Pg = 20 psf
Importance Factor, Is = 1.0
Flat Roof Snow Load, Pf = 19 psf
Thermal Factor, Ct = 1.0

WIND DESIGN: Wind load is determined using Chapter 27 of ASCE 7-10 in accordance with IBC Section 1609 with the following factors:

Basic Wind Speed (3-Second Gust)	V = 110 MPH
Wind Importance Factor Iw = 1.0	Risk Category = II
Exposure Category = B	GCpi = ±0.18

SEISMIC DESIGN: Earthquake design is determined using Chapter 12 ASCE 7-10 in accordance with IBC Chapter 16 with the following factors:

Importance Factor Ie = 1.0	
Risk Category= II	
Ss = 1.221 g	Sds = 0.823 g
S1 = 0.464 g	Sd1 = 0.475 g
Site Class = D	Seismic Design Category = D

DEFLECTIONS:

Roof Total Load Deflection Limit:	L/180
Roof Live load Deflection Limit:	L/240

LIVE LOADS:

Roof (Live)	20 PSF
Roof (Snow)	25 PSF

STRUCTURAL STEEL

DESIGN STANDARDS: Structural steel for this project is designed in accordance with the latest edition of the AISC Steel Construction Manual.

REFERENCE STANDARDS: Conform to:
(1) AISC "Code of Standard Practice for Steel Buildings & Bridges."
(2) RCSC "Specification for Structural Joints using ASTM A325 or A490 Bolts."
(3) AWS D1.1 "Structural Welding Code - Steel."
(4) AWS D1.3 "Structural Welding Code - Sheet Steel."
(5) AWS D1.8 "Structural Welding Code - Seismic Supplement."
(6) AISC 341 "Seismic Provisions for Structural Steel Buildings."
(7) ASCE 3 "Standard for the Structural Design of Composite Slabs."

SUBMITTALS:
(1) Submit shop drawings in accordance with AISC Specification Sec M1 "Shop and Erection Drawings."

MATERIALS:
Other Structural Shapes ASTM A36, Fy = 36 ksi

FABRICATION/ERECTION: Conform to AISC Specification Sec M2 "Fabrication", AISC Code Sec 6 "Fabrication and Delivery" and AISC Code Sec 8 "Quality Control." The fabricator and erector shall maintain a quality control program to the extent deemed necessary so that all of the work is performed in accordance with this Code, the AISC Specification, contract documents and project specifications.

SHOP PAINTING: Conform to AISC 360, AISC Specification Sec M3, and AISC Code Sec 6.5. Do not paint steel to be embedded in concrete, fireproofed, or concealed by the interior building finish. Do not paint surfaces to be field welded or where slip-critical bolts are specified. All other interior steel shall be painted with one coat of grey shop primer. All exposed exterior steel shall be painted with an exterior multi-coat system as per the Architect or project specifications. Field touch-up painting shall be with primer for exposed interior surfaces and as per the Architect or project specifications for exposed exterior surfaces.

GALVANIZING: All exposed steel outside the building envelope shall be hot-dipped galvanized. Apply field touch-ups per project specifications.

ERECTION: Conform to AISC Specification Sec M4 "Erection" and AISC Code Sec 7 "Erection." Steel work shall be carried up true and plumb within the limits defined in AISC Code Sec 7.11.

BRACING: The contractor shall provide temporary bracing by AISC Specification Sec M4.2 "Bracing" and AISC Code Sec 7.10 "Temporary Support of Structural Steel Frames."

COLD-FORMED STEEL FRAMING

REFERENCE STANDARDS: Conform to:
(1) AISI "Specification for the Design of Cold-Formed Steel Structural Members."
(2) IBC Section 2210 and 2211.
(3) AWS D1.3 "Structural Welding Code - Sheet Steel."

SUBMITTALS: Submit structural calculations and shop drawings stamped by the SSE. Reference DEFERRED SUBMITTALS above for additional information. Shop drawings shall indicate member sizes, spacing, and materials; shop and field assembly details and connections; type and location of bolts, welds and other fasteners; design live and wind loads; bracing or diaphragm design to resist lateral loads. Submit product data and proof of ICC approval for framing members and fasteners.

MATERIALS:

Studs and Track	
16 gage and heavier	ASTM A653 Grade D or ASTM A1011 Grade 50, Min FY=50 KSI
18 gage and lighter	ASTM A653 Grade A or ASTM A1011 Grade 33, Min FY=33 KSI
Sheet Metal Screws	Grabber Wafer Self-Drilling, #8x1/2
Track to Steel	Hilti ESD 16 P8T
Galvanizing	Studs and Track shall be galvanized in accordance with ASTM A525, G60
Fastenings not shown	As recommended by the manufacturer

SIZE AND PROFILE: Cold-formed steel framing members shall be as specified in the Steel Stud Manufacturer's Association ICC ESR-3064P and of the size and profile as shown on the drawings. Alternate members' equivalent in shape, size, stiffness, and strength by manufacturers not current members of the Steel Stud Manufacturer's Association shall be subject to review and approval by the EOR.

INTERIOR WALL STUDS DESIGN CRITERIA: The lateral force and deflection limits on interior partition walls shall be per Chapter 16 of the IBC. The lateral load deflection criteria shall be L/240 for plaster and drywall finishes. The studs shall be attached to the new structure so as to not interfere with other trades of the project. Steel plate embeds may need to be designed into the post-tensioned or cast-in-place slab. The quantity and placement of embeds will be the responsibility of the metal stud supplier.

BUNDLED STUDS/JOISTS: Stud or joist groups of three or more studs shall be shop welded together with 1/8" fillet wells x 2" long, both sides, at 48"OC. Bundled joists that are framed in a box beam header style with a top and bottom track do not require welding. Box beam framing shall have #8 screws at 24"OC in each of the four track corners.

CONNECTORS: Connectors shall be installed per the manufacturer's instructions. Where connector straps connect two members, center the connector between the two members and place one half of the screws or bolts in each member. UNO, all screws all be #8 x 1.25" Hex Washer Head.

ERECTION: Erect framing in accordance with manufacturer's instructions and shop drawings.

FIELD CUTS and NOTCHES: Field cuts or notches of any kind are not permitted in axial load bearing cold-formed steel members, or any member in the shearwall or drag struts. If a field cut is required, contractor shall contact the EOR prior to cutting. The EOR will provide direction to the contractor.

MEMBER CONDITIONS: All structural cold-formed framing members must maintain a good condition. Damaged members, members with cracking in the steel at the bend radius locations, and members with significant red rusting or scaling of the protective coating are unacceptable and must be replaced, unless approved by EOR. Handling and lifting of prefabricated panels shall not cause permanent distortion to any member or collateral member. Members not meeting tolerances listed above, must be replaced prior to any axial loading.

TOLERANCE:
Axial load-bearing cold-formed steel framing members shall be erected true and plumb within the specified tolerance listed below. For purposed of this section, camber is defined as the deviation from straightness of a member or any portion of a member with respect to its major axis, and sweep is defined as the deviation from straightness of a member or any portion of a member with respect to its minor axis.
(1) For axial load bearing studs, out of plump and out of straightness (camber and sweep) shall not exceed 1/1000th of the member length.
(2) For joists, out of straightness (camber and sweep) shall not exceed 1/1000th of the member length.
(3) For track, camber shall not exceed 1/1000th of the member length.

PERMANENT BRACING & BRIDGING: Double flat strap or channel bridging as permitted on the structural drawings shall be installed at 4'-0" oc maximum unless noted otherwise on the drawings and adequately braced with permanent flat strap cross bracing prior to applying any axial loads to studs.

TEMPORARY BRACING: The contractor is responsible for the strength and stability of the structure during construction. Contractor shall provide temporary bracing and other elements required to maintain stability until the structure is complete. Temporary bracing shall be designed by a licensed Washington State registered structural Engineer (SSE) and submitted to the EOR for approval prior to fabrication of the framing.

WOOD FRAMING

REFERENCE STANDARDS: Conform to:
(1) IBC Chapter 23 "WOOD."
(2) NDS and NDS Supplement - "National Design Specification for Wood Construction."
(3) ANSI/TPI 1 "National Design Standard for Metal-Plate-Connected Wood Truss Construction."
(4) BCSI 2008 "Building Component Safety Information."

ALTERNATES: Alternates for specified item may be submitted to the EOR for review. Contractor shall submit a current ICC-ES report identifying that an alternative component has the same or greater load capacity than the specified item.

IDENTIFICATION: All sawn lumber and pre-manufactured wood products shall be identified by the grade mark or a certificate of inspection issued by the certifying agency.

MATERIALS:

Sawn Lumber: Conform to grading rules of WWPA, WCLIB or NLGA. Finger jointed studs acceptable at interior non-structural walls only.

Member Use	Size	Species	Grade
Studs & Plates	2x4,3x4,2x6,3x6	HF	No. 2
Joists	2x6 – 2x12	HF	No. 2
Beams	4x6 – 4x12	HF	No. 2

Wood Structural Sheathing (Plywood): Wood APA-rated structural sheathing includes: all veneer plywood, oriented strand board, waferboard, particleboard, T1-11 siding, and composites of veneer and wood based material. Conform to Product Standards PS-1-95 and PS-2-92 of the U.S. Dept. of Commerce and the American Plywood Association (APA)

		Minimum APA Rating		
Location	Thickness	Span Rating	Plywood Grade	Exposure
Roof	15/32"	24/16	C-D	1

Joist Hangers and Connectors: Simpson Strong-Tie Company Inc. as specified in their latest catalogs was used as the basis of design for this project. Alternate connectors by other manufacturers may be substituted provided they have current ICC approval for equivalent or greater load capacities and are reviewed and approved by the EOR prior to ordering. Connectors shall be installed per the manufacturer's instructions. Where connector straps connect two members, place 1/2 of the nails or bolts in each member. Unless noted otherwise all nails shall be full length common. Nail straps to wood framing as late as possible in the framing process to allow the wood to shrink and the building to settle.

Nails and Staples: Conform to IBC Sec 2303.6 "Nails and Staples." Unless noted on plans, nail per IBC Table 2304.9.1, Unless noted otherwise all nails shall be common. Nail sizes specified on the drawings are based on the following specifications:

COMMON NAILS

Size	Length	Diameter
8d	2-1/2"	0.131"
10d	3"	0.148"
16d	3-1/2"	0.162"
16d Sinker	3-1/4"	0.148"

Lag Bolts/Bolts: Conform to ASTM A307. Provide washers under the heads and nuts of all bolts and lag screws bearing on wood.

NAILING REQUIREMENTS: Provide minimum nailing in accordance with IBC Table 2304.10.1 "Fastening Schedule" except as noted on the drawings. Nailing for roof/floor diaphragms/shear walls shall be per drawings. Nails shall be driven flush and shall not fracture the surface of sheathing.

MOISTURE CONTENT: Wood material used for this project shall have maximum moisture content of 19% except for the pressure-treated wood sill plate.

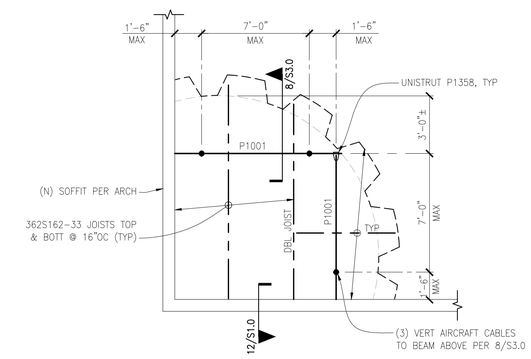

SOFFIT - PLAN 8

SCALE: 1/4" = 1'-0"

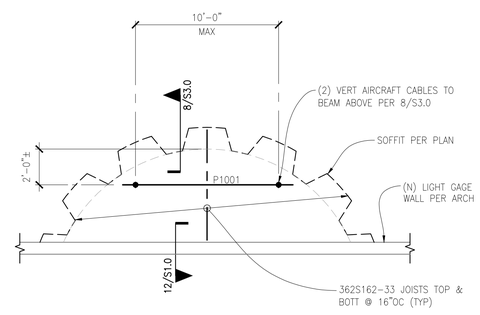

SOFFIT - PLAN 11

SCALE: 1/4" = 1'-0"

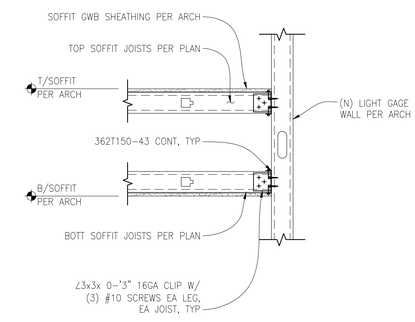

NEW
SOFFIT FRAMING TO EXISTING SOFFIT FRAMING 12

SCALE: 1" = 1'-0"

DEI
DIBBLE ENGINEERS INC
www.dibbleengineers.com
1029 Market Street, Kirkland, WA 98033
425.828.4200

SEAL:

DAVID S. COLLANDER
STATE OF WASHINGTON
39519
STRUCTURAL ENGINEER
PROFESSIONAL ENGINEER
5/19/17

PLANET FITNESS
19516 STATE ROUTE 410E
BONNEY LAKE, WA 98391

PROJECT #:	17-179
DRAWN BY:	MRL
DESIGNED BY:	KGU

DATE:	DESCRIPTION
05.19.2017	PERMIT

JURISDICTIONAL STAMP:

SHEET TITLE:

STRUCTURAL GENERAL NOTES, SECTIONS & DETAILS

SHEET NUMBER:

S 1.0

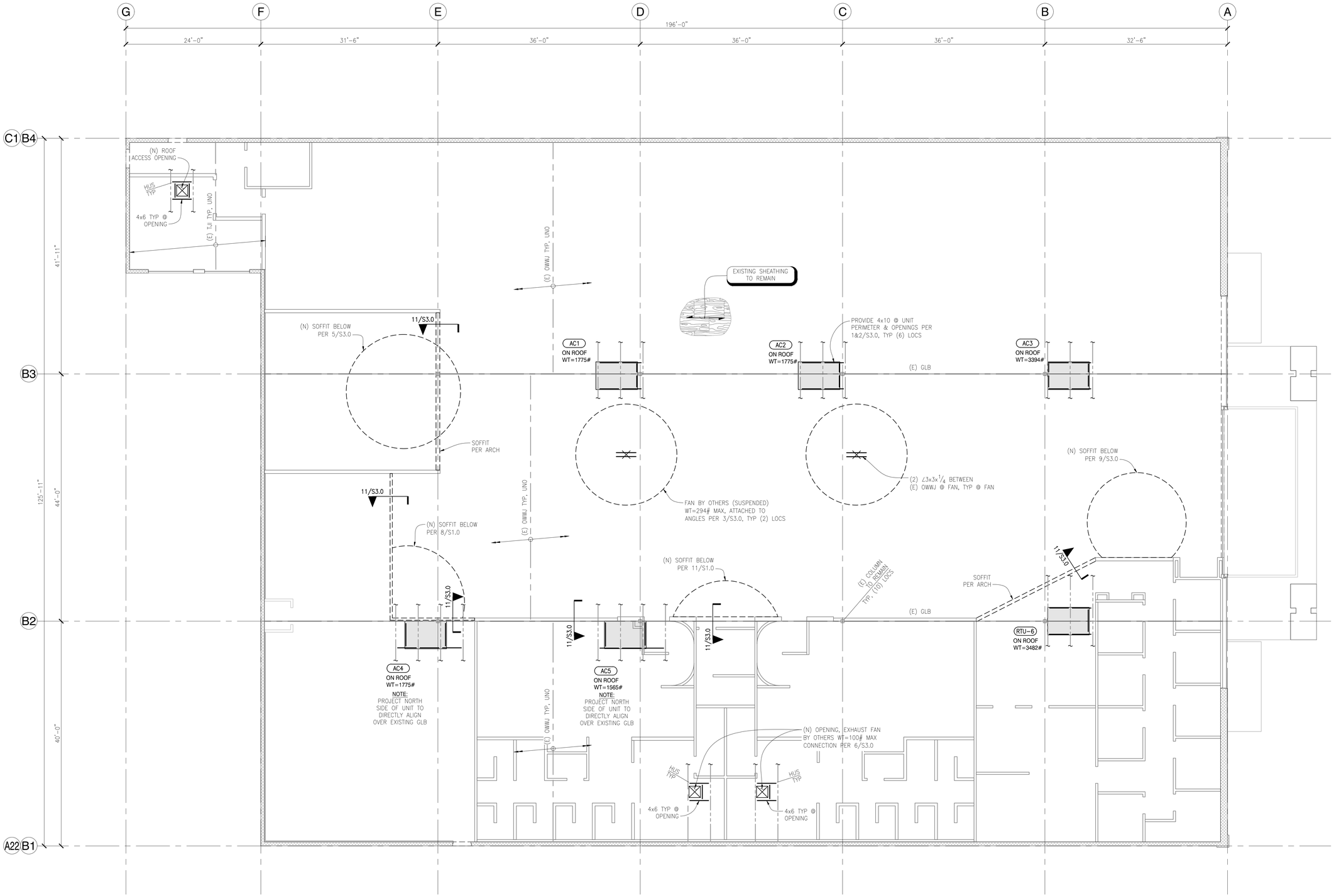

NOTE: CONTRACTOR TO VERIFY ALL EXISTING CONDITIONS AND ARCHITECTURAL DRAWINGS PRIOR TO FABRICATION & CONSTRUCTION. NOTIFY DEI OF ANY DISCREPANCIES FOR FURTHER DIRECTION

ROOF FRAMING PLAN

SCALE: 1/8" = 1'-0"

0' 4' 8' 16'

(PROJECT) N

DEI
DIBBLE ENGINEERS INC
www.dibbleengineers.com
1029 Market Street, Kirkland, WA 98033
425.828.4200

SEAL:

DAVID S. COLLANDER
STATE OF WASHINGTON
39519
STRUCTURAL ENGINEER
PROFESSIONAL ENGINEER

5/19/17

PLANET FITNESS
19516 STATE ROUTE 410E
BONNEY LAKE, WA 98391

PROJECT #:	17-179
DRAWN BY:	MRL
DESIGNED BY:	KGU
DATE:	DESCRIPTION
05.19.2017	PERMIT

JURISDICTIONAL STAMP:

SHEET TITLE:

STRUCTURAL ROOF AND WALL FRAMING PLAN

SHEET NUMBER:

S 2.0

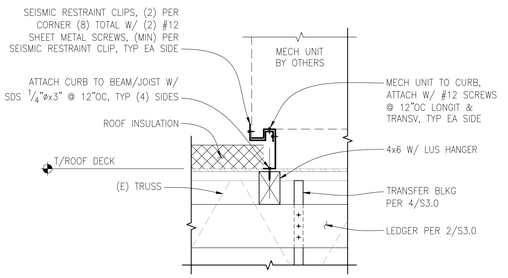

MECHANICAL UNIT TO ROOF STRUCTURE CONNECTION

SCALE: NTS

1

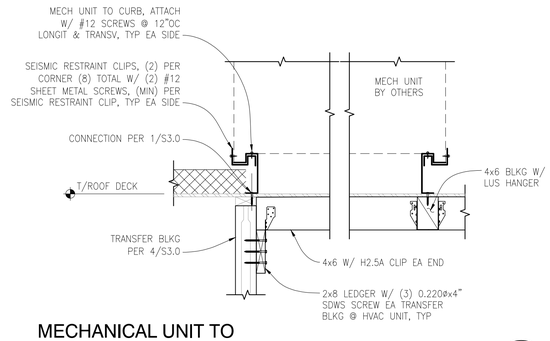

MECHANICAL UNIT TO ROOF STRUCTURE CONNECTION

SCALE: NTS

2

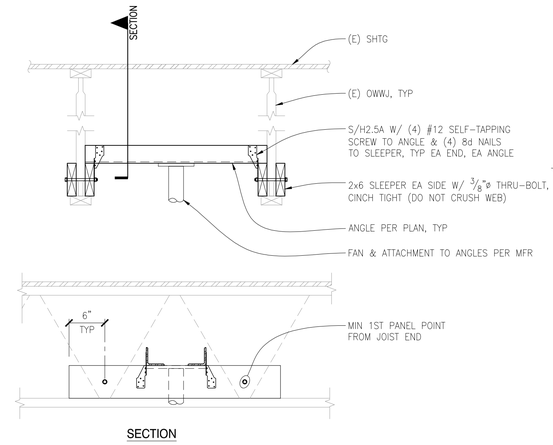

FAN SUPPORT

SCALE: N.T.S.

3

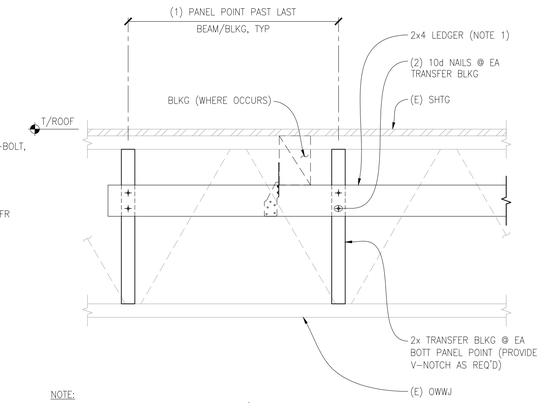

NOTE:
1. UPSIZE LEDGER AT HVAC UNITS PER 2/S3.0.

TRANSFER BLOCKING FRAMING

SCALE: N.T.S.

4

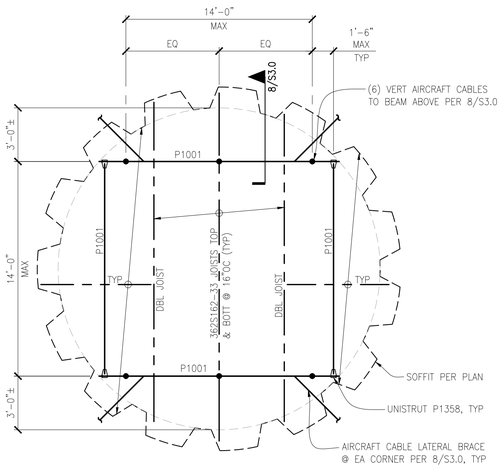

SOFFIT - PLAN

SCALE: 1/4" = 1'-0"

5

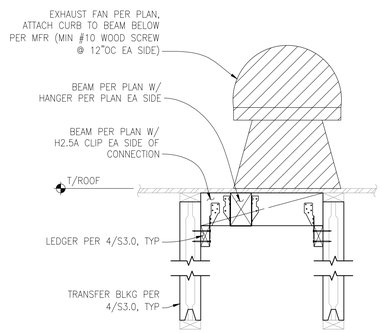

EXHAUST FAN SUPPORT

SCALE: N.T.S.

6

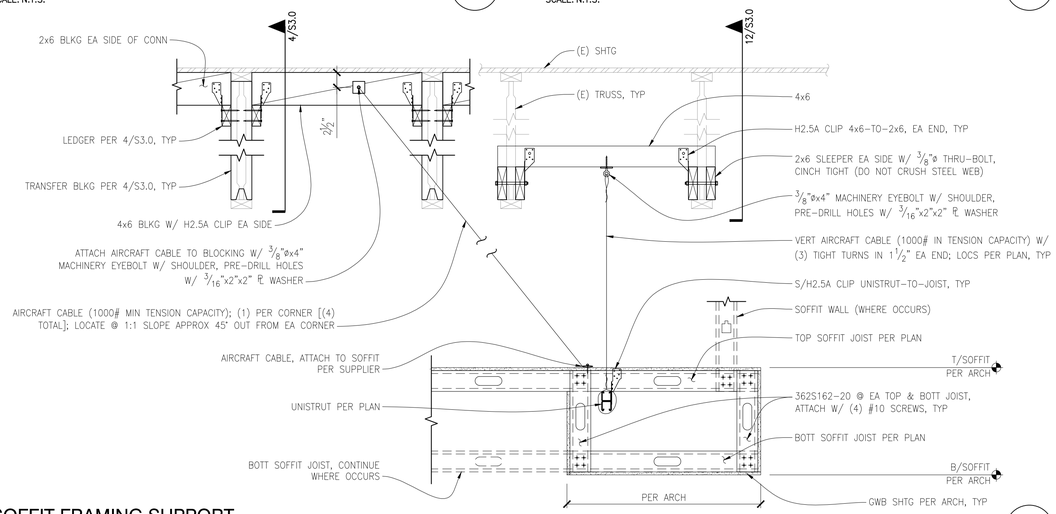

SOFFIT FRAMING SUPPORT

SCALE: N.T.S.

8

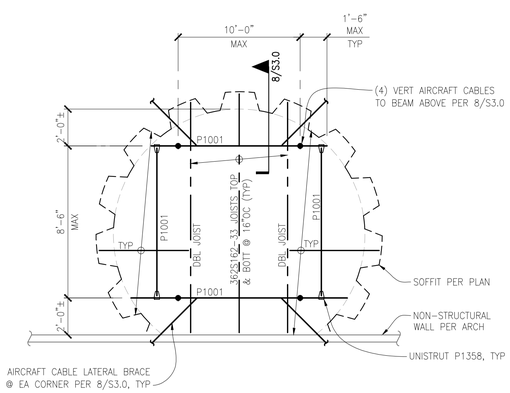

SOFFIT - PLAN

SCALE: 1/4" = 1'-0"

9

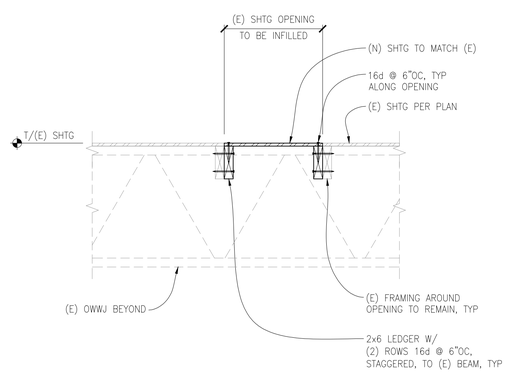

TYPICAL ROOF INFILL

SCALE: 1" = 1'-0"

10

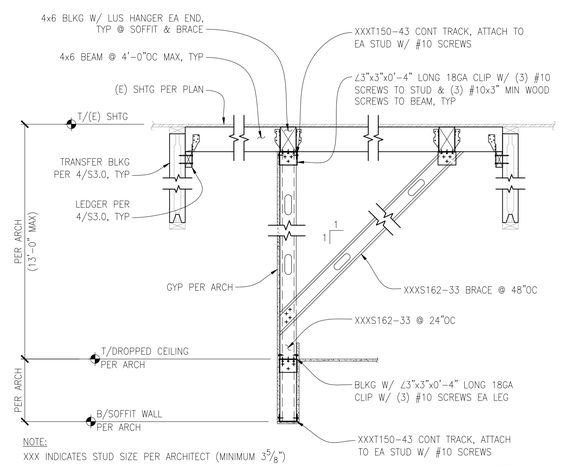

NOTE:
XXX INDICATES STUD SIZE PER ARCHITECT (MINIMUM 3 5/8")

SOFFIT WALL SECTION

SCALE: 3/4" = 1'-0"

5251x

11

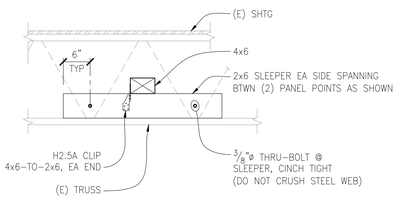

SOFFIT SUPPORT

SCALE: N.T.S.

12

DEI
DIBBLE ENGINEERS INC
www.dibbleengineers.com
1029 Market Street, Kirkland, WA 98033
425.828.4200

SEAL:

5/19/17

PLANET FITNESS
19516 STATE ROUTE 410E
BONNEY LAKE, WA 98391

PROJECT #:	17-179
DRAWN BY:	MRL
DESIGNED BY:	KGU
DATE:	DESCRIPTION
05.19.2017	PERMIT

JURISDICTIONAL STAMP:

SHEET TITLE:

STRUCTURAL SECTIONS & DETAILS

SHEET NUMBER:

S 3.0